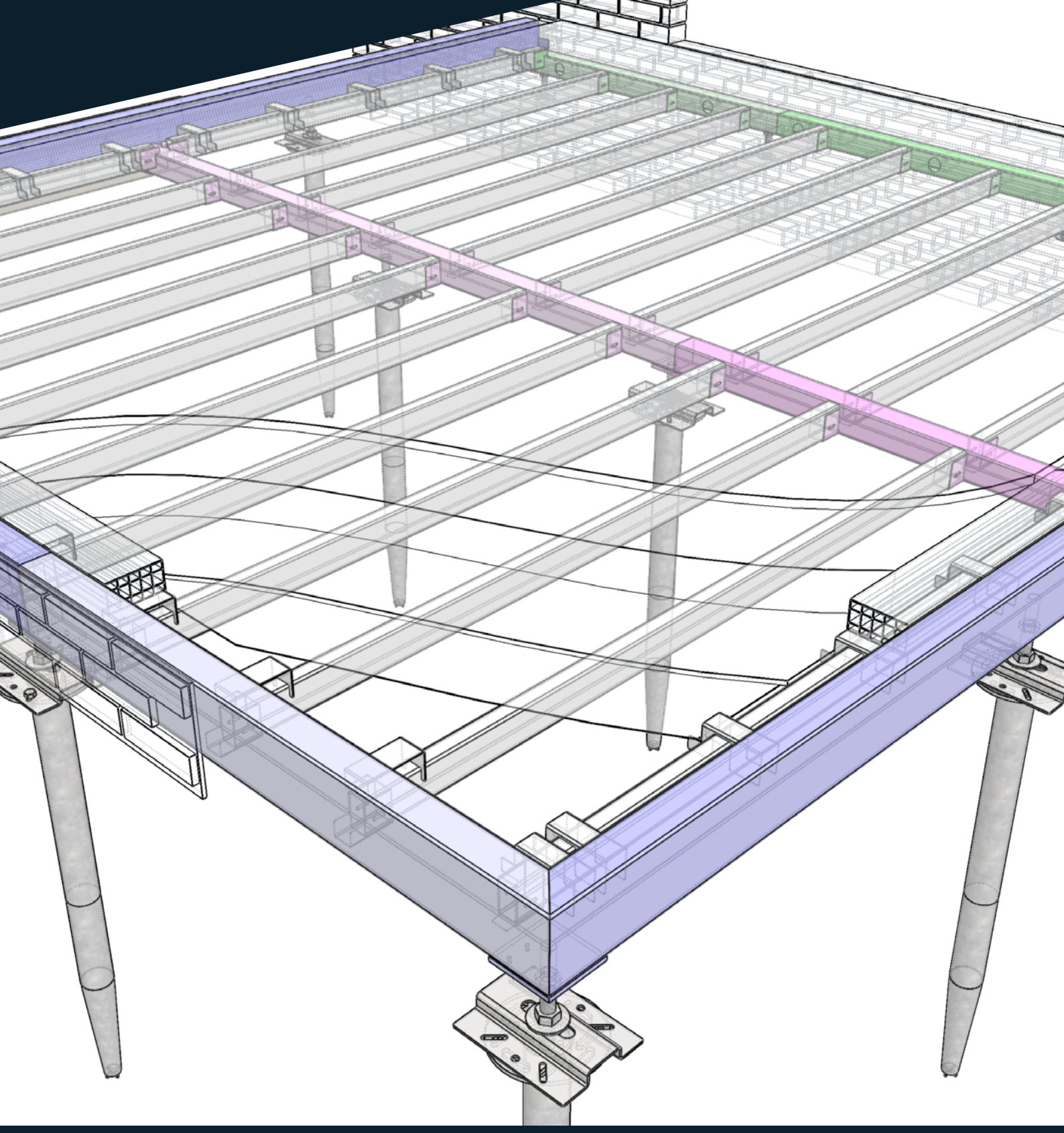

INSTALLATION GUIDE

v4 I 10.26

DURABASE

BUILDING FOR THE FUTURE

10 YEAR GUARANTEE

TRADING SINCE 1986

www.durabase.co.uk | 01432 266507

Introduction

Thank you for choosing Durabase. This guide is designed to make building as straightforward as possible. Before you commence the Durabase build, please take a moment to read the guide. This guide is written on the basis that a qualified surveyor has undertaken correct checks for the capability / structural performance of any existing framework / walls / foundations to verify they are fit for purpose. Any feedback - positive or negative - is welcomed so we can make our systems even better.

Contents

Health and Safety	2
What's in the box?	3
Setting Out from the Host Wall	4
Preparing the Site: Ground Screws	5
Preparing the Site: Pads	6
Durabase: Installation Sequence	7
Back Cill Installation	9
Steel Base Assembly: GS	11
Steel Base Assembly: Pads	15
Skirt Panel Installation	19
Durawall Assembly	22
Rendering Guidelines	26
Internal Floor Assembly	27
Firewall / Non Firewall Spec	30

Read ALL the instructions completely BEFORE commencing any work. Understanding these instructions and familiarity with procedures will make the build process much easier and an enjoyable project to undertake. **Not reading the instructions could lead to problems later on in the build process.**

Health and Safety

Site safety is paramount. The Construction (Design & Management) Regulations 2015 apply to the whole construction process, on all construction projects from concept through to completion. Compliance is required to ensure construction projects are carried out in a way that secures health and safety. The installation company shall be responsible for the safety of all of the fitting team, the customer and members of the public.

The Surveyor should have carried out a risk assessment to reduce risk on site and this should have been discussed with you prior to starting.

Always use equipment in line with manufacturers recommendations. Personal Protective Equipment - such as goggles, gloves, mask and ear defenders – should be used when appropriate.

Careful consideration should be given to the safe disposal of all packaging - packaging is predominantly made from recycled materials and can be readily recycled.

For technical support, please contact us on **01432 266507** or email **sales@durabase.co.uk.**

For everything you need to know about Durabase, including guides and explainer videos, visit **www.durabase.co.uk/resources/**

What's in the box?

The kit is supplied with order specific location plans, a packing checklist and, of course, this installation guide. The location plan is used to match individual components to their respective positions.

Base Support Parts



Ground screw Attachment
Base to ground screw



Fixing Down Plate
Base to concrete pad



Jacking Leg & Plate
Levelling the base

Supplied Fixings



(a) 10 x 110 Hex Anchor
Back cill to host wall



(b) 10 x 50mm Coach Bolts
Ground screw attachment to ground screw



(c) 10 x 50 Sleeve Anchor
Fixing down leg to concrete pad



(d) 10 x 110 Hex Nut & Bolt
Splitter beam to edge beam



(e) M6 x 60 Nut & Bolt
Floor joist to hanger



(f) 50mm Csunk Self-drilling Screw
Skirt to edge beam



(g) 4.8 x 100mm Csunk Self-drilling Screw
Durawall to edge beam thermal break



(h) 10 x 19mm Hex Head Self-drilling Screw
Durawall to base



(i) M8 x 20mm Hex Nut & Bolt
Durawall to Durawall



(j) 60mm Nylon Frame Fixing
Durawall to house wall



(k) 60mm Self-Tapping Screw
FH Frame to base fixing

Ancillary Materials



Damp Proof Course (DPC)



Moisture Membrane (on top of joists)



Weed Suppressing Membrane (for ground under base)



Brick Slips



Brick Slip Adhesive



Brick Slip Mortar



Foil Tape

NOTE: Not all items on this list will apply to your order. Base type and spec will vary items.

Setting out from the host wall

This section explains how to establish the correct base position relative to the host wall. Before assembly, check the wall alignment and identify any deviations that may affect the base location. Any discrepancies should be noted and measures taken to adjust as necessary.

The wall(s) you are fixing the Durabase and conservatory/extension against must be of sound construction and flat, any render, pebble dash, cladding etc. will need to be checked before the Durabase can be fixed into position.

Setting Out Point (SP)

To ensure the conservatory or extension is installed square and plumb, the alignment of the host wall(s) must be checked before setting out the base.

Wall leaning outwards

If the host wall leans outwards, suspend a plumb line from the highest point where the roof will meet the wall. The point at which the plumb line meets the ground establishes the Setting Out Point (SP). Set out the base from this point. Any resulting gap between the base and wall shall be made good using suitable packers (not supplied). The base and wall size will need to be started from this point.

Wall leaning inwards

If the host wall leans inwards, set out the base directly from the base of the wall. This location becomes the Setting Out Point (SP). Any gap at the top of the wall shall be accommodated using suitable packers (not supplied) to ensure the wall is installed plumb and correctly aligned.

Note Any additional trims to cover large gaps are not included with the base or conservatory/extension and should be purchased separately. If house is leaning outwards, you may need to specify extra skirting when you order.

House wall leaning outwards

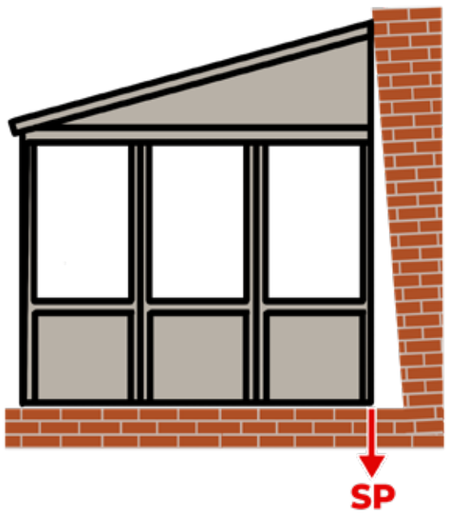

House wall leaning inwards

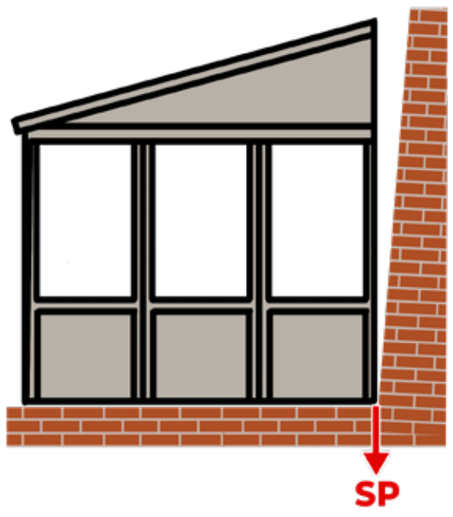

Preparing the Site: Ground screws G/S

This page provides the site preparation and installation requirements for a Durabase on ground screws.

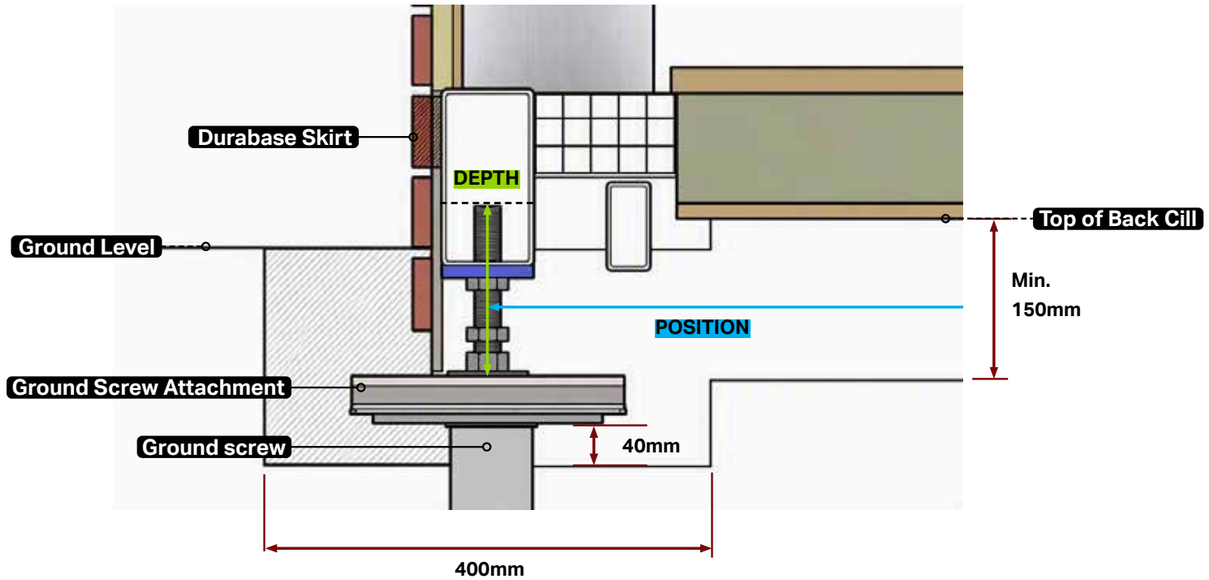

Installation Requirements

- Install ground screws at the positions shown on the screw plan.
- See screw plan for DPC (top of steel) to top of screw measurement. The depth is calculated from the base's DPC to the top of the screw plate
- Position tolerance: ±50 mm.
- Depth tolerance: ±20 mm.
- Excavate a minimum 400 mm × 400 mm area around each ground screw.
- Maintain a minimum 40 mm clearance beneath the ground screw head for bolt installation and tightening.
- Min. 150mm excavation for airflow / ventilation (refer to the above diagram)
- Ground screws must finish below ground level to avoid obstructing the Durabase Skirt.

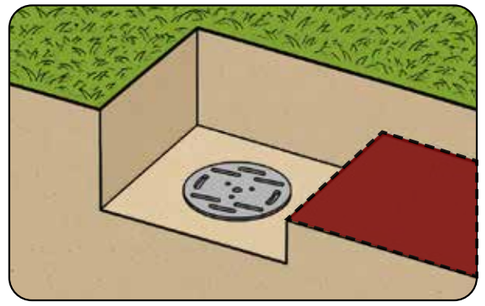

IMPORTANT Cover all disturbed ground beneath the building footprint with the supplied weed suppressant membrane.

Positional Variations

Any ground screw moved more than 50 mm from the position shown on the screw plan must be corrected by the ground screw supplier. Deviations greater than 50 mm are not permitted without approval.

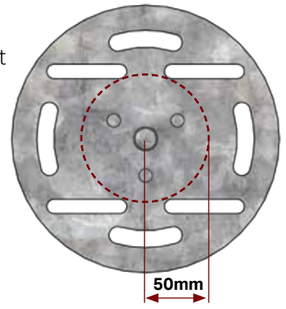

Structural Compliance

The ground screw supplier shall provide structural calculations and certification demonstrating compliance with the applicable design loads and Building Control requirements.

Airflow

It is imperative to dig out beneath the base to provide adequate airflow. On all Durabases this is 150mm down from the top of the back cill.

Refer to the pad plan

Preparing the Site: Pads

If you are using pads which are required under each fixing down leg. Refer to the pad plan provided for the location and number of concrete pads required. The back cill does not require concrete pads because this is fixed to the house wall. Any legs fitted to the back cill are used for levelling and need to rest on something firm e.g. paving slabs or blocks.

For each pad dig out a hole, the exact width and depth required for Building Regulations will vary depending on the situation – please consult Building Control to determine the right size and depth for your project.

The pads should be dug down into firm natural ground, but other factors should be taken into account such as:

- The type of subsoil
- Presence of trees/roots
- Location and invert of drains
- On clay, sand or peaty subsoil further excavation will be required.

Fill the holes with concrete (C40 grade recommended) to the level specified on the pad plan. This measurement is from the top of the pad to the steel (DPC) level. You must ensure that the pads are deep enough to meet Building Regulations based on the ground conditions. Publicly available guidance suggests up to 1000mm for cohesive soil prone to movement e.g. clay. The depth required for Building Regulations will vary depending on the situation – please consult Building Control to determine the right depth for your project.

Airflow

It is imperative to dig out beneath the base to provide adequate airflow. On all Durabases this is 150mm down from the top of the back cill.

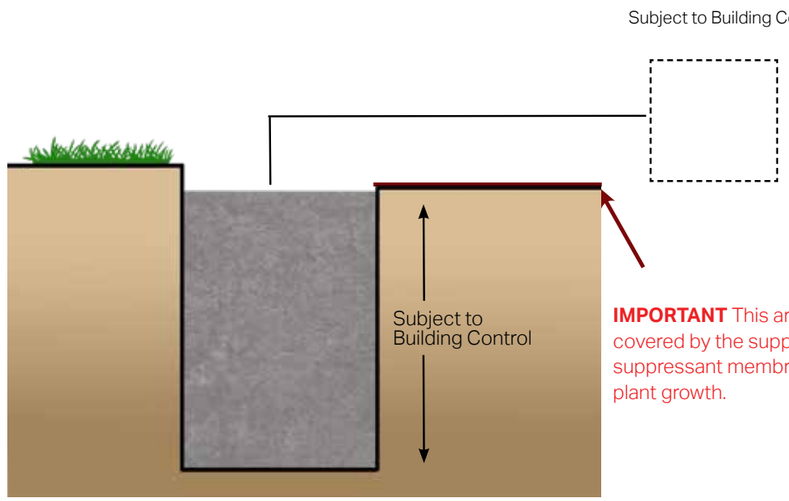

IMPORTANT This area should then be covered by the supplied breathable weed suppressant membrane to prevent weed/ plant growth.

Note Concrete pads should be below ground level based on the survey measurements given. If the top of the concrete pad is above ground level, there may be something wrong!

Durabase: Installation Sequence

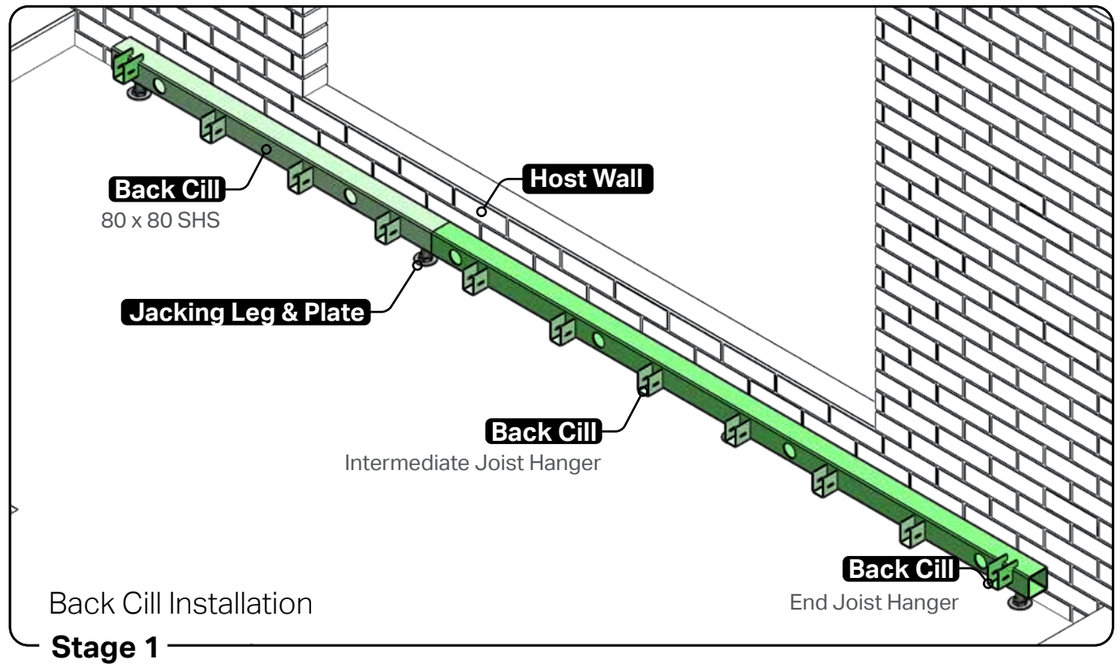

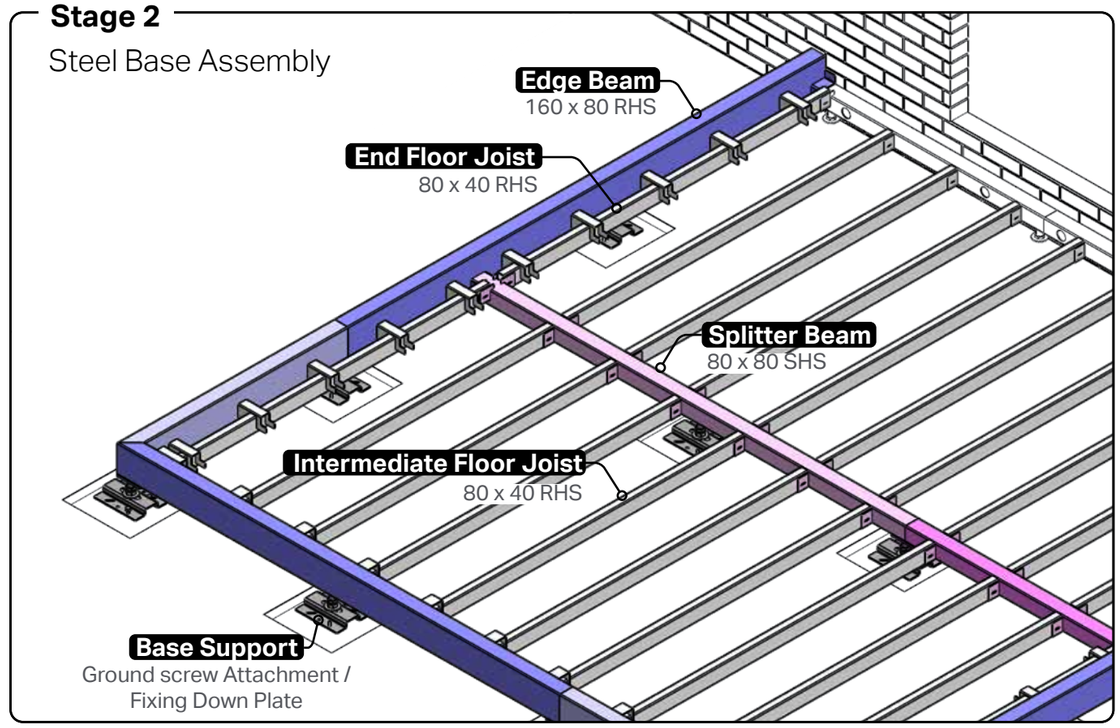

Stage 3

Skirt Panel Installation

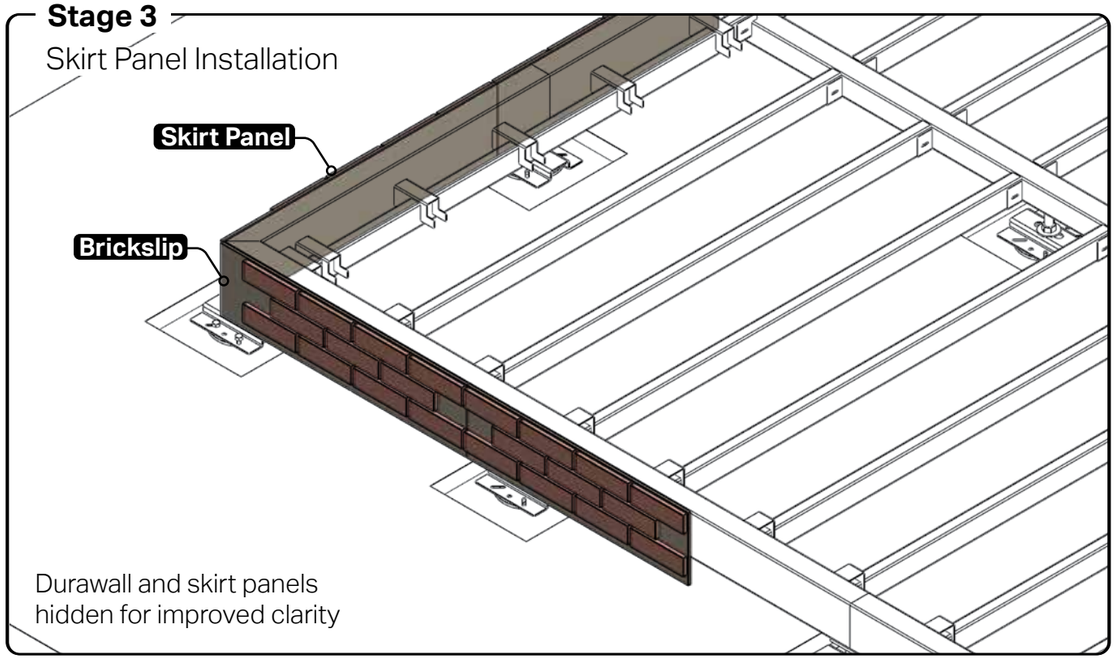

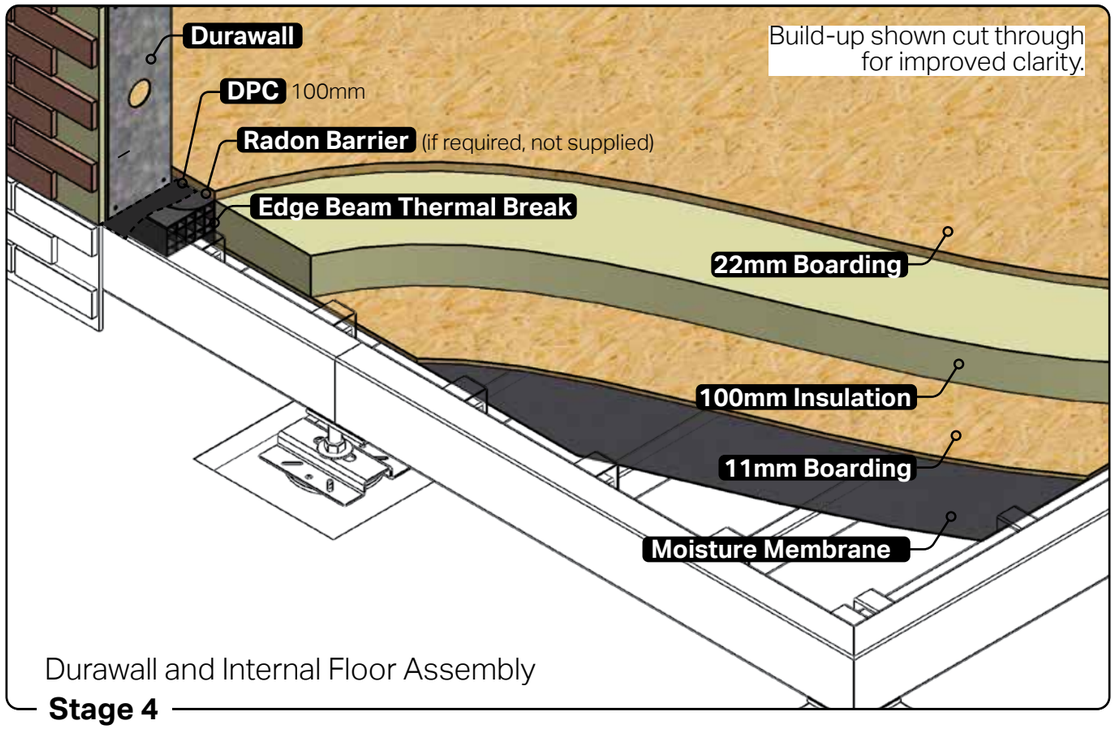

Stage 4

To assist with identifying base components and simplify the installation process, the key components of the base are numbered. A base labelling map will be supplied that corresponds to the identification numbers welded to each member of the base, to assist in setting out before fitting.



1.0 Screw the lock nuts onto the **jacking legs,** then screw the **jacking legs** into the welded nuts which are located on the underside of the **back cill section (80 x 80 SHS)**. Position the **load-bearing plates (70mm circular washers)** beneath each **jacking leg**. Ensure all **jacking legs** are supported on a firm, stable surface to prevent settlement or sinking. e.g. paving slabs or blocks.

1.1 Position the **back cill section (80 × 80 mm SHS)** against the house wall in the location shown on the setting-out drawings. Once positioned, adjust the section to the height specified on the site drawings to accommodate the required floor build-up. Ensure the section is level across its full length before proceeding with installation.

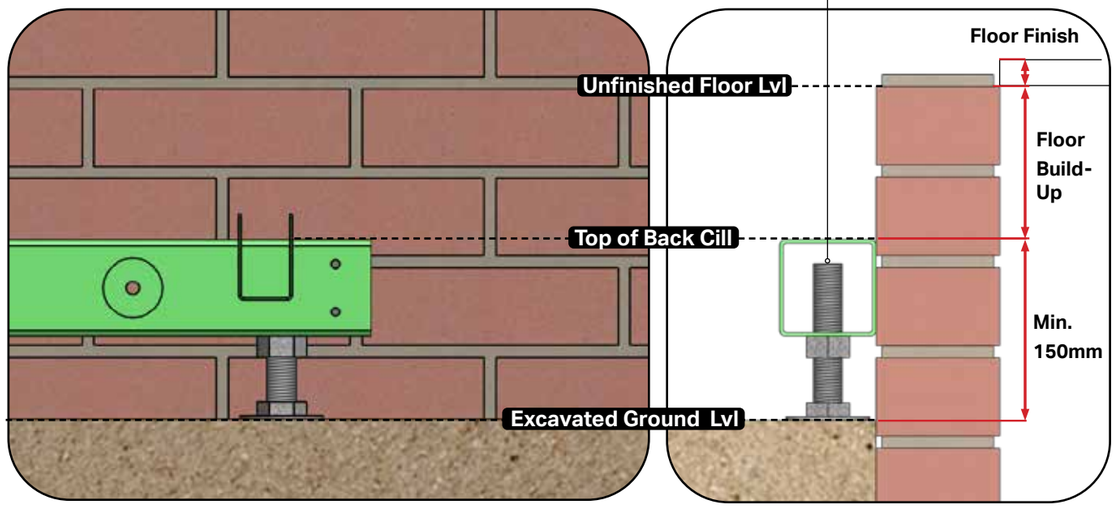

Durabase Type	Floor Build-Up (Unfinished floor lvl to top of back cill)
Durabase Plus 100	134mm
Durabase Plus 120	154mm

IMPORTANT When setting the extension finished floor level to align with the existing house finished floor level, allowance must be made for the thickness of the proposed floor finish.

The **back cill section (80 x 80 mm SHS)** is intentionally shorter than the overall base width as part of the Durabase design. It is positioned lower than the **edge beam sections (160 x 80mm RHS)** to accommodate the **lower boarding** and **insulation** within the floor construction.

If the **upper boarding** is installed below the property's **damp-proof course (DPC)**, a suitable **vertical damp-proof barrier** must be provided to maintain continuity of damp protection between the existing property and the extension floor build-up.

Back Cill Installation

1.2 Check that the **back cill section (80 x 80mm SHS)** is level along its full length. Using the fixing holes as a guide, drill pilot holes into the masonry with a 10mm masonry drill bit.

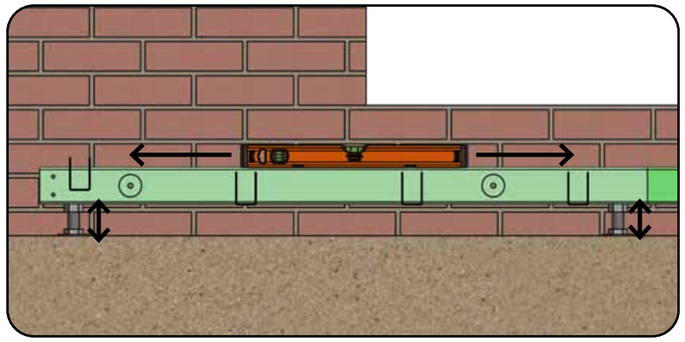

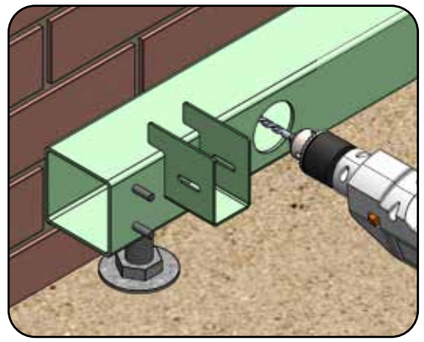

1.3 Remove the **back cill section (80 x 80mm SHS)** and re-drill pilot holes to a depth of 70mm using a 16mm masonry drill bit. Using **(a) 10 x 110 Hex Head Anchors**, insert the anchor sleeve into the holes and remove the bolts. Replace the **back cill section (80 x 80mm SHS)**, insert bolts and tighten using a 17mm socket.



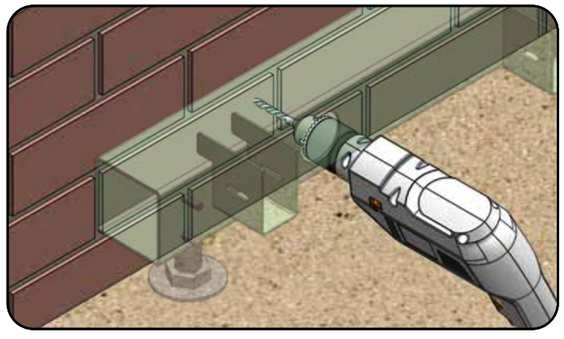

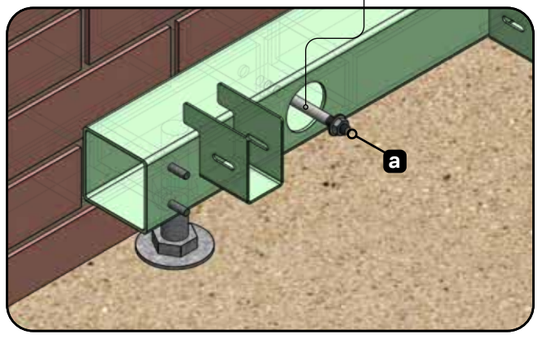

Steel Base Assembly: G/S

2.0 Using the pre-assembled **ground screw attachment**, screw the jacking leg into the welded nuts located on the underside of the **edge beam sections (160 x 80mm RHS)**.

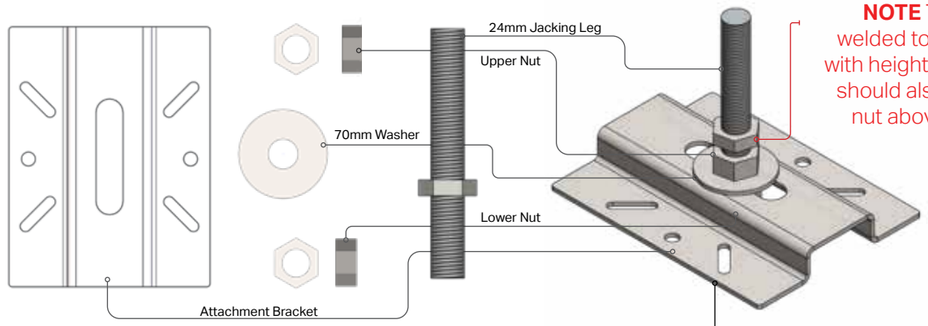

NOTE The centre nut is welded to the leg to assist with height adjustment. You should also have a locking nut above this to lock off the leg to base.

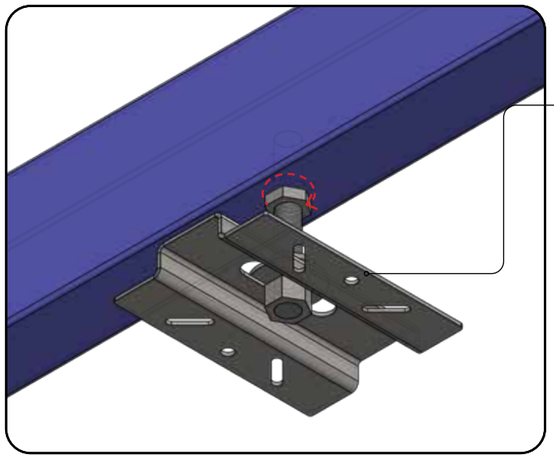

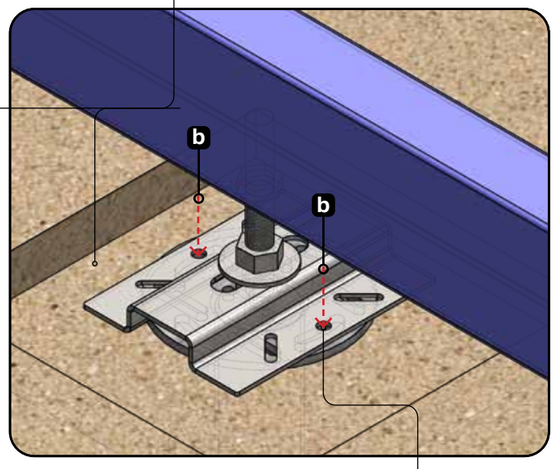

IMPORTANT: Until the base has been permanently secured, there is a risk of movement or uplift, which may cause it to disengage from the ground screws. To minimise this risk, it is strongly recommended that **2no. (b) 10 x 50mm Hex Head Bolts** are installed through both the **ground screw attachment** and the **ground screw** at this stage.

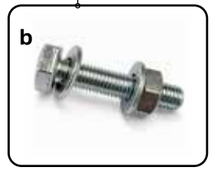

It is the responsibility of the ground screw supplier to demonstrate that the applied vertical and horizontal forces can be resisted by the installed ground screws. An assessment of the vertical load, wind pressures and subsequent lateral forces applied to the ground screws must be undertaken by the ground screw supplier or building provider on a project-by-project basis in accordance with the relevant wind loading codes of practice and the geometry of the proposed building.

Test certificates that state the passing of the required standard for building control must also be supplied.

2.1 Fit the **edge beam side sections (160 × 80 mm RHS)** to the **back cill section (80 × 80 mm SHS)** by locating the corner brackets over the pre-welded studs. Secure each connection using the nuts supplied, but do not fully tighten them at this stage to allow for final alignment during assembly.

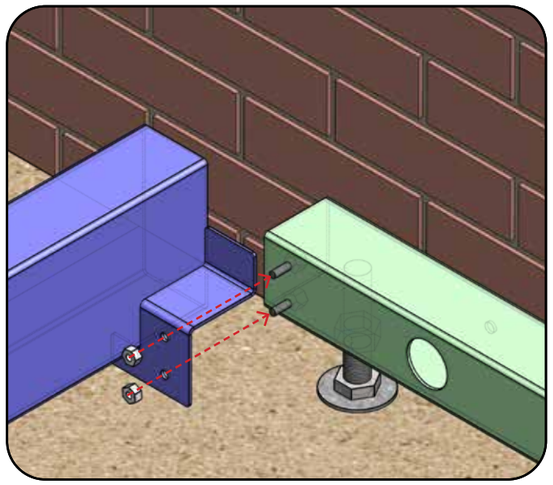

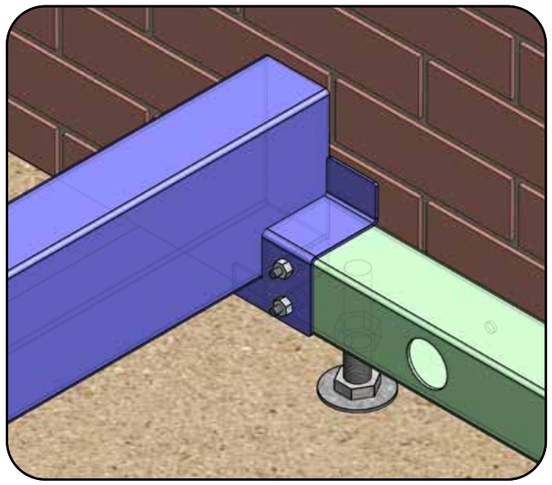

2.2 Install the pre-assembled **ground screw attachment** to the **edge beam front section (160 x 80mm RHS)** at joint locations using the same method. Inline joints and corner joints will include a bearing plate which allows the adjacent beam to be supported at the junction. The pre-welded studs assist with locating and aligning the beams at the joints. Once positioned, secure the beams using the supplied nuts. Beams should be sequenced to ensure the beam with the bearing plate and **ground screw attachment** are installed first.

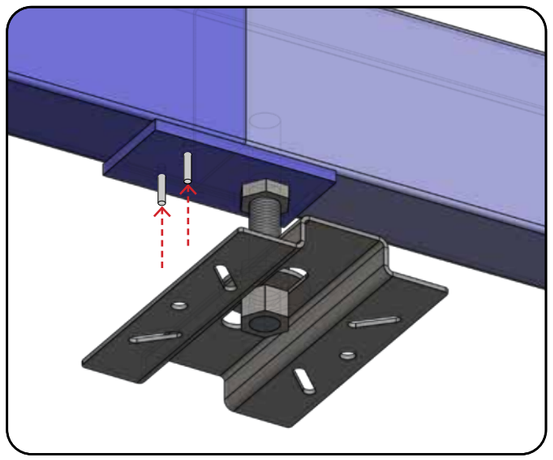

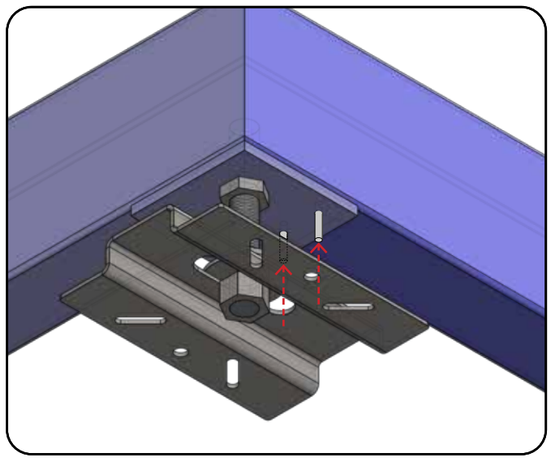

Steel Base Assembly: G/S

2.3 Install the pre-assembled **ground screw attachment** to the **splitter beam section (80 x 80mm SHS)** using the same method. Position the **splitter beam** within the 'u' support brackets / hangers located on the edge beam. Once correctly aligned, secure the splitter beam to the hanger using **(d) 10 × 110 mm Hex Nut and Bolt.**

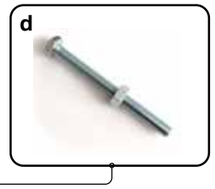

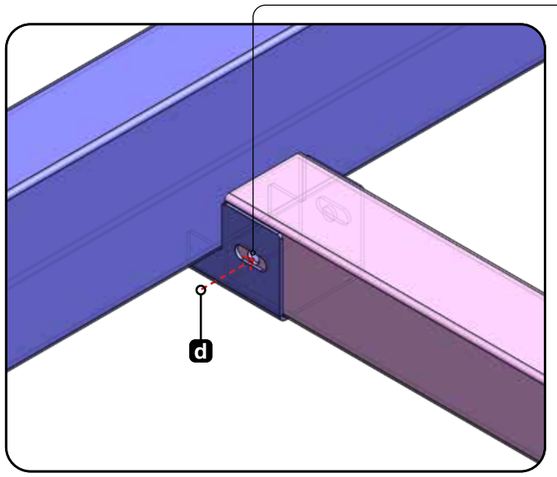

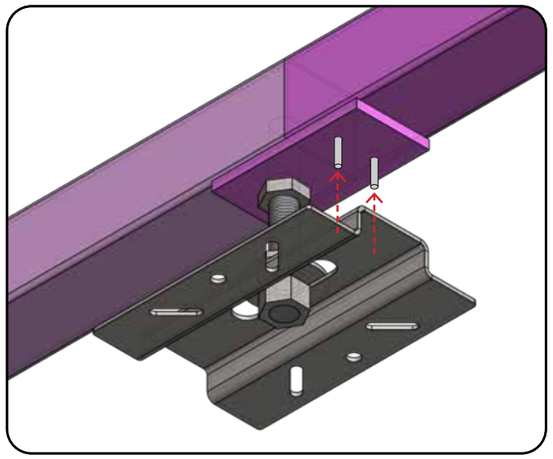

2.4 Ensure that the **lower locking nut** is raised and the **70mm washer** can move freely. Starting at one corner and working around each support position, adjust the **24mm jacking legs** so that they are fully supporting the weight of the steel base. Use the **welded locking nuts** to make incremental height adjustments as required, regularly checking the level of the base with a spirit level throughout the process.

NOTE: The centreline of each jacking leg must be within 50mm of the centreline of the corresponding ground screw. If this tolerance cannot be achieved, the ground screw must be repositioned before proceeding.

Ensure the base is square and level, then tighten all joints. Recheck the level and tighten the lock nuts on the jacking legs and ground screw attachments to secure the final position.

The base should now be level, square, and ready for the next stage of installation.

Steel Base Assembly: G/S

2.5 Once the base is level and fully supported by the ground screws locate the **ground screw attachment** to ensure the **4no. (b) 10 x 50mm Hex Head Bolts** can be used to fix it down. Rotate the **ground screw attachment** and adjust its position as necessary to achieve the optimum fixing arrangement. The fixings must pass through four of the highlighted slots. The **ground screw attachment** should remain centrally positioned over the ground screw, with the bracket in full contact with the top of the **ground screw**.

NOTE For ground screws that are on a slight angle, use the packing shims supplied to ensure all points of the plate are in contact with the ground screw. The weight of the base still needs to be transferred through to the ground screw via the leg.



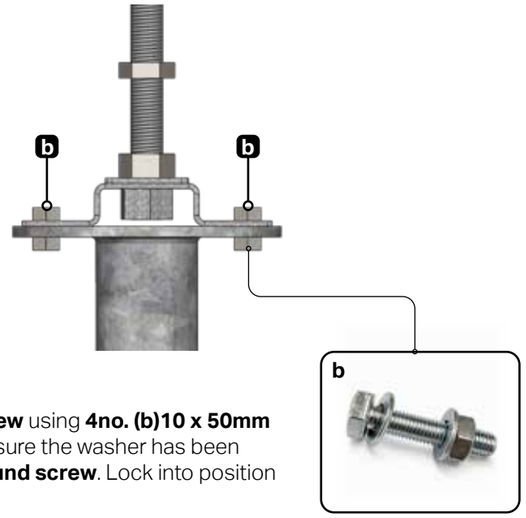

2.6 Fix the **ground screw attachment** to the **ground screw** using **4no. (b)10 x 50mm Hex Head Bolts** supplied. Tighten using the nuts making sure the washer has been positioned between the nut and the underside of the **ground screw**. Lock into position using the lower locking nut to secure the entire leg.

2.7 Slot the **floor joists (80 x 40mm RHS)** into the welded 'u' support brackets / hangers, and secure using the supplied **(e) M6 x 60 Nut & Bolt**. Tighten with 10mm spanner.



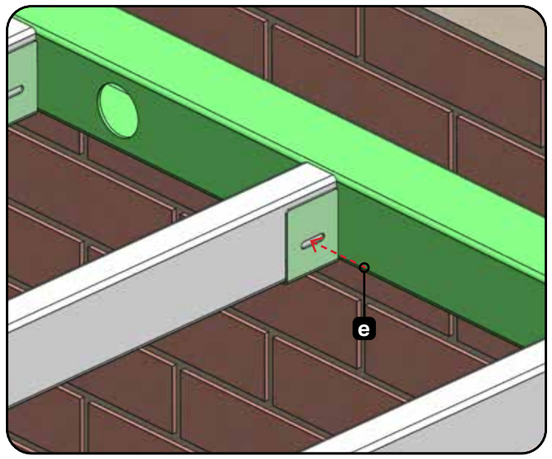

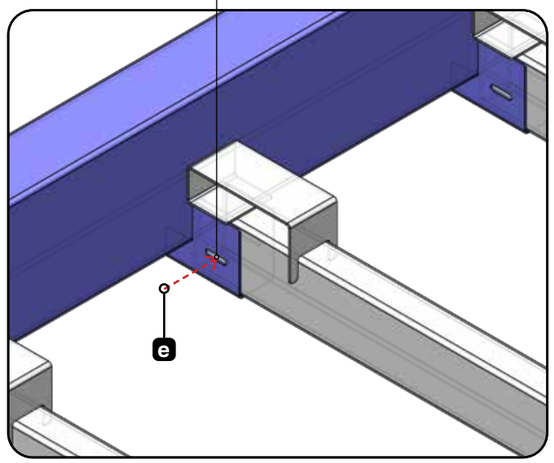

Refer to the steelwork plan

Steel Base Assembly: Pads

2.0 Assemble the **fixing down plate**, including lock nuts, and screw into the welded nuts located on the underside of the **edge beam sections (160 x 80mm RHS)**.

NOTE: A fixing down leg is required on each pad to secure the base. In certain positions, there will be a second slot where a jacking leg will also be required to assist with levelling the base.

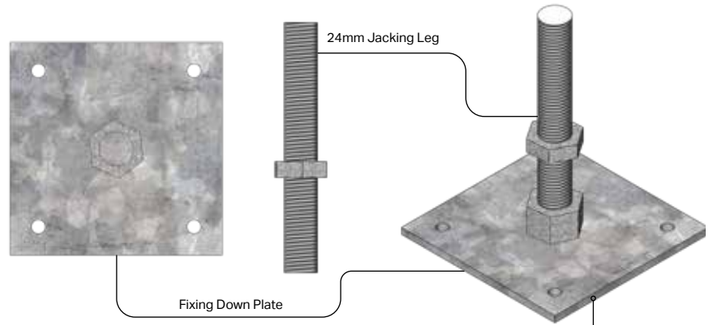

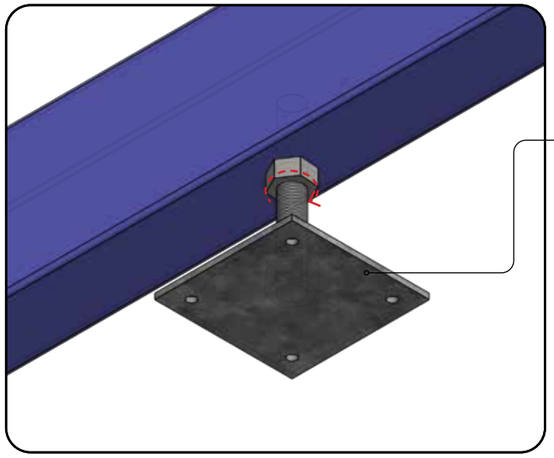

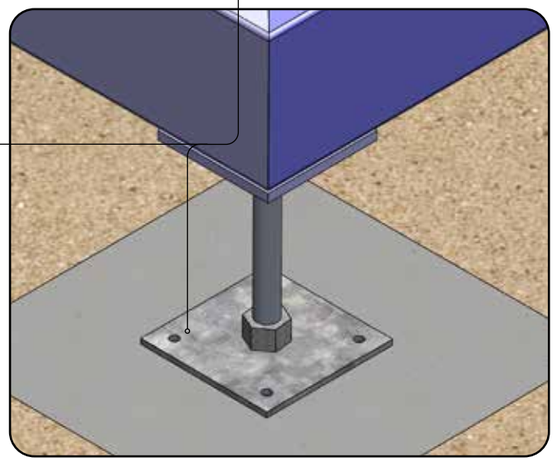

2.1 Fit the **edge beam side sections (160 × 80 mm RHS)** to the **back cill section (80 × 80 mm SHS)** by locating the **corner fixing brackets** over the **pre-welded studs**. Secure each connection using the **nuts** supplied, but do not fully tighten them at this stage to allow for final alignment during assembly.

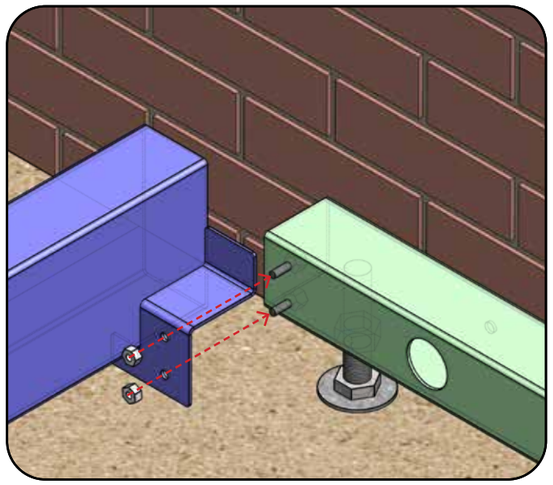

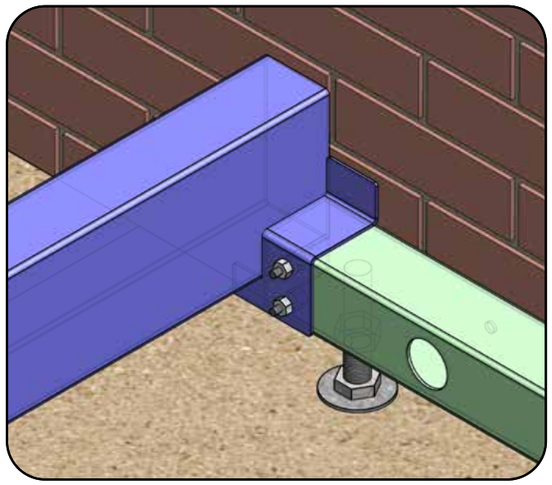

2.2 Repeat the above step for the **edge beam front section (160 x 80mm RHS)**. Edge beam inline joints and corner joints will include a **bearing plate** which allows the adjacent edge beam to be supported at the junction. Once located in position the beams should be secured in place using the supplied **nuts**. Beams should be sequenced to ensure the beam with the **bearing plate** and **fixing down plate** are installed before the adjacent supported beam.

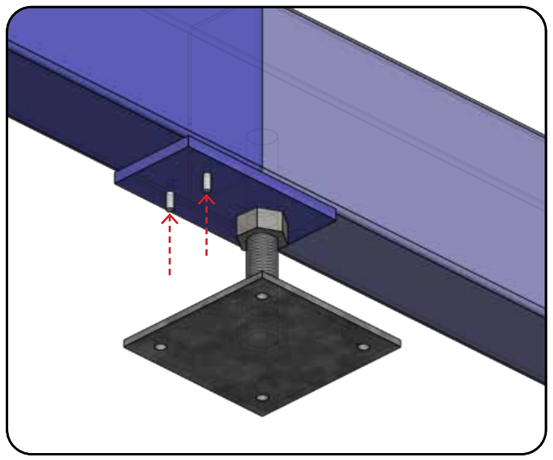

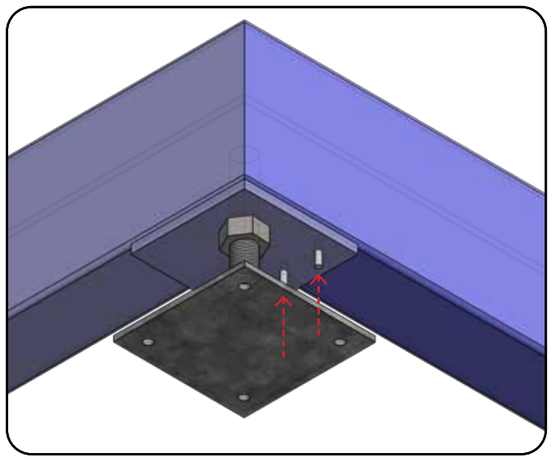

Steel Base Assembly: Pads

2.3 Repeat the above step for the **splitter beam section (80 x 80mm SHS).** The **splitter beam section** should be positioned within the welded hangers located on the **edge beams (160 x 80mm RHS)** . Once positioned the splitter beam should be fixed in place using a **(d) 10 x 110 Hex Nut & Bolt**.



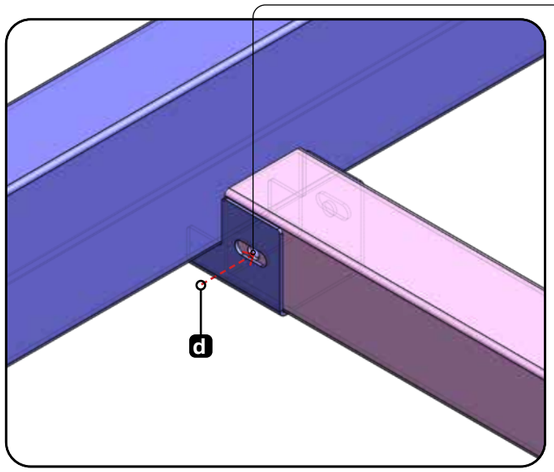

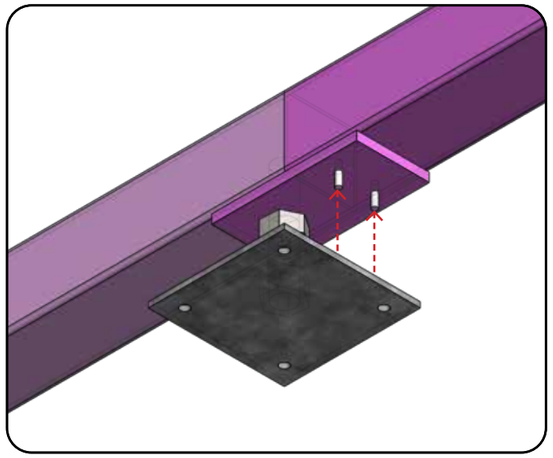

2.4 Working around each position, adjust the **fixing down legs** so that they fully support the weight of the steel base. Use the **welded locking nut** to adjust the height as required, checking the level of the base using a spirit level throughout the process.

Check that the base is square and tighten all joints. Re-check levels and tighten lock nut on the **fixing down plate**.

The base should now be level, square, and ready for the next stage of installation.

2.5 Slot the **floor joists (80 x 40mm RHS)** into the welded 'u' support brackets / hangers, and secure using the supplied **(e) M6 x 60 Nut & Bolt**. Tighten with 10mm spanner.



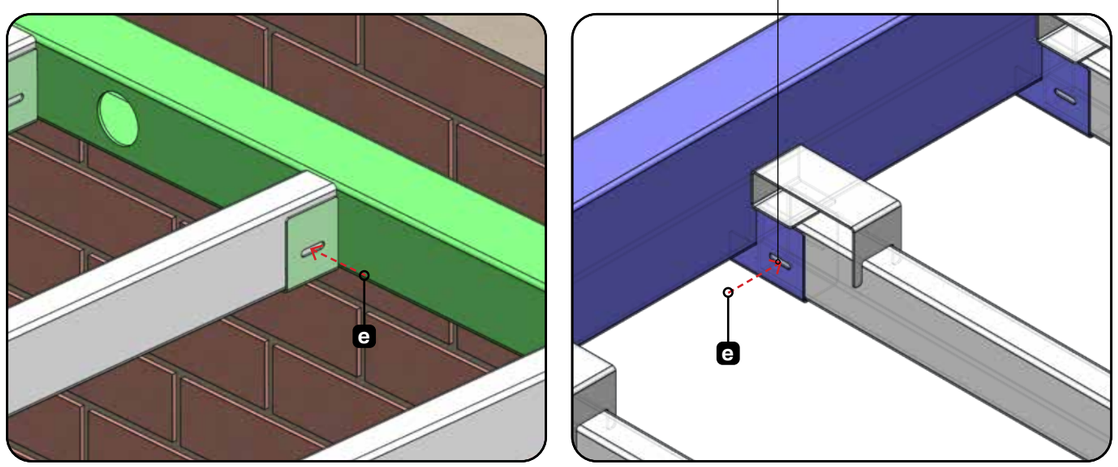

2.6 Secure fixing down plate leg to the concrete pad using the supplied **(c) 10 x 50mm Hex Head Sleeve Anchors**. Pre-drill the concrete using a 10mm masonry bit before fixing down. Refer to project specific drawings which indicate the min. number of fixings required.



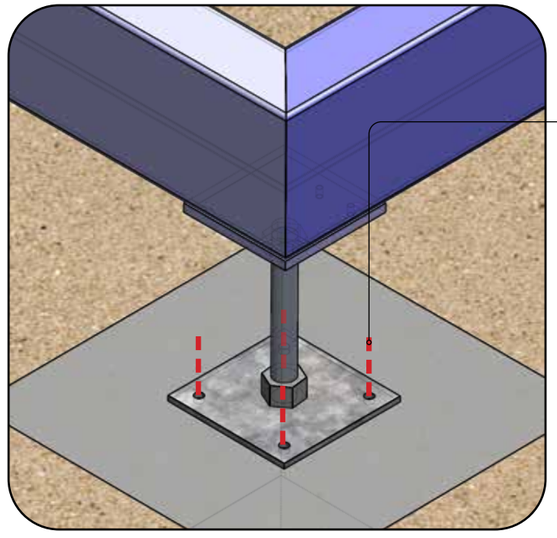

3.0 Lay out the **skirt panels** in the order they are to be fitted. The panels are lettered to correspond with the skirt plan and ensure the brick slips are flush with the top edge. Fit the panels so the top edge lines up with the top face of the **edge beam.**



3.1 Clamp the **skirt panel** to the **edge beam** to hold in place temporarily and line up before fixing.

NOTE: The ends of the panels that correspond with an external corner of the base frame must line up with the edge of the edge beam face. Do not overlap panels on the corners.

3.2 Using the **(f) 50mm Csunk Self-drilling Screws** supplied, fix where the brick slips are still to be fitted and through perpendicular mortar joints if extra fixings are required.

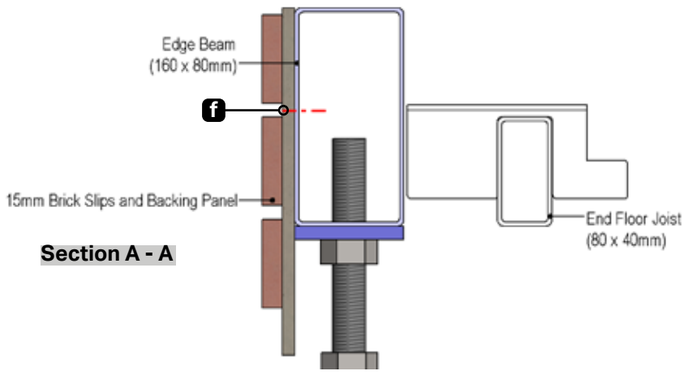

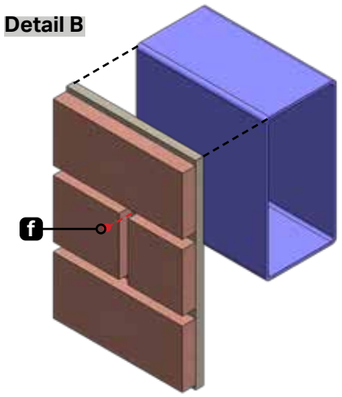

3.3 Once fully constructed, use the **adhesive** supplied to fix the spare **brick slips** in place. You will need to use some **10mm spacers** to position the **brick slips** on the **skirt panels**. Press the bricks firmly into place.

NOTE: Be aware of the weather forecast during the building process, the construction adhesive supplied can be used in temperatures between 5°C and 35°C.

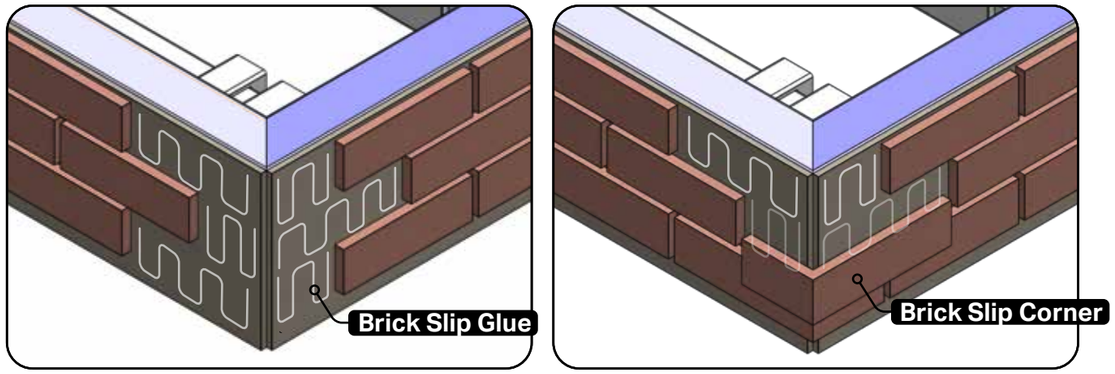

Mortaring the skirt

3.4 To point the joints, mix the mortar supplied with water until a consistency of a stiff cream is achieved. Fill the joints around the bricks completely using a pointing bag (these can be purchased from Durabase). Ensure you follow the instructions on the mortar supplied.

NOTE: Check correct consistency by filling the bag, the mortar should hang from the end of the nozzle when the bag is shaken down.

3.5 Allow the mortar to dry until fairly firm. We would recommend that the mortar is firm enough that when pushed in with a finger only a small indentation is left behind. It should have a dull finish, be moist but not wet and somewhat gritty. Use a curved pointing tool to strike off mortar and then, when almost dry, remove any remaining mortar with a soft brush.

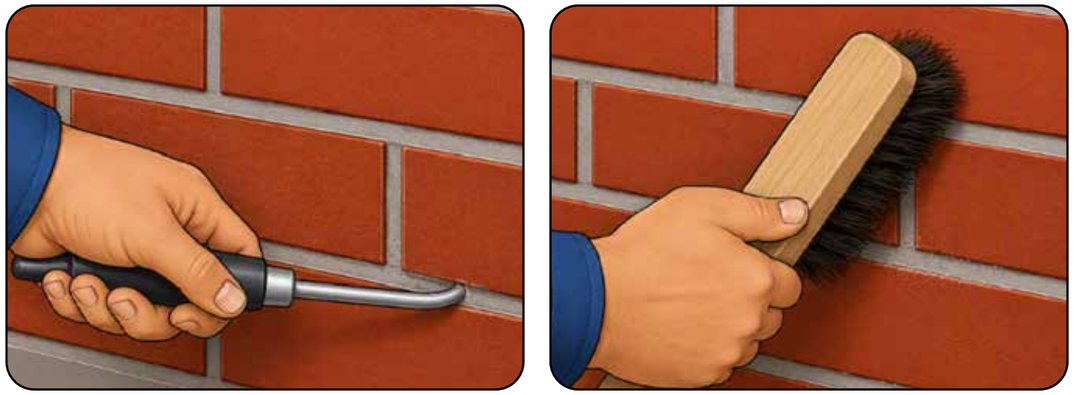

NOTE: Do not be tempted to strike off when the mortar is too moist. Overworking the mortar can cause colour variation, as each additional pass draws moisture to the surface. This may result in the mortar drying to a lighter shade than intended.

Durabase Plus 100 bases with a 225mm skirt include a 35mm un-bricked section of cement board at the bottom to facilitate backfilling from the outside.

This additional 35mm enables us to have the air gap under the base that is required.

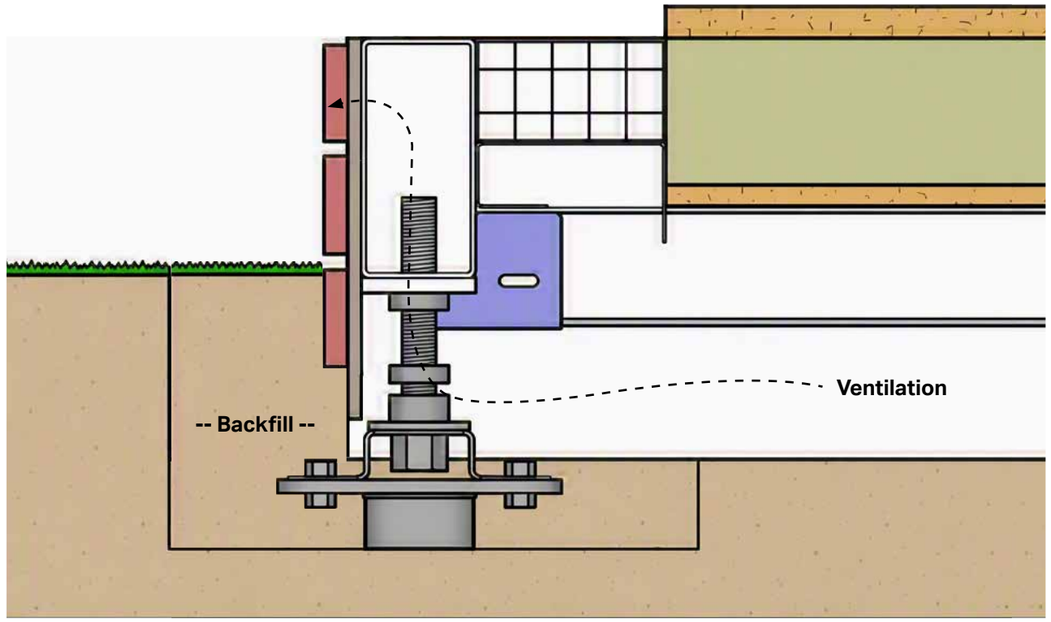

Ready to Render and Plain Skirts

3.6 Install the **ready to render / plain skirt panels** in the same manner as **brick slip skirt panels** using the supplied **(f) 50mm Csunk Self-drilling Screws**. The boards must be cut to the required length before installation. Air vents should be incorporated into the skirt panels as required. The vent location is cut into the steel so vent cut outs in the skirt must match the steels vent locations.

NOTE: Refer to the project set-out drawings and verify dimensions on site before cutting. Vents are cut oversize in the steel, cut skirts to air brick size.

NOTE: For render finish guidelines, please see page 26.

4.1 Install the **edge beam thermal break** around the perimeter of the base as per the set out drawings.

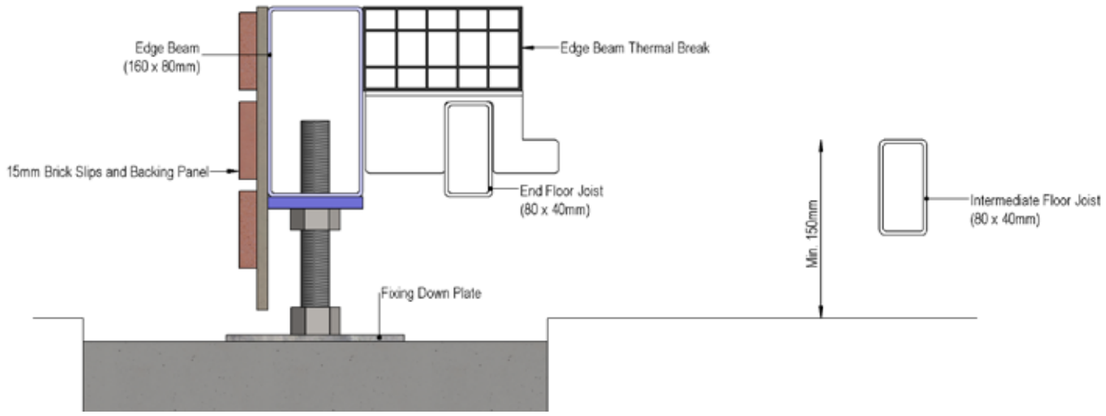

4.2 Prior to fitting the **DPC** lay a line of construction **adhesive** (supplied) along the join between the steel frame and the back edge of the skirt panel.

4.3 Lay the **DPC** so that the outer edge lines up with the outer edge of the **skirt panel** (allowances may need to be made for render thickness or other external finishes). Cut to length and press into the bead of **adhesive**. Lay another bead of construction **adhesive** along the top edge of the **DPC** approximately 15mm back from the outer edge of the edge beam.

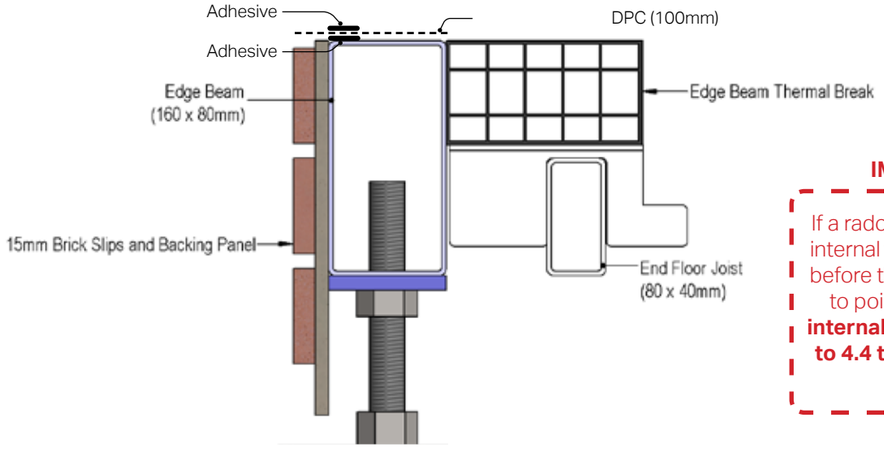

IMPORTANT NOTE

If a radon barrier is required. the internal floor should be installed before the Durawall panels. Skip to point **4.12 to 4.16** for the **internal floor assembly, return to 4.4 to 4.11** for the **Durawall assembly.**

4.4 Starting with the first **Durawall panel** against the host wall as per the walls and skirt plan, place a bead of **mastic** approximately **15mm** from the outer edge of the end that butts against the house. Offer the panel up to the host wall but do not fix it in position a this stage.

If a brick slip external finish is specified on the **Durawall panel** this should typically line up with the external skirt on the base. If render board with a plain skirt has been specified this may be set back.

Note: Take care when handling the Durawall panels as they are heavy on the outer side due to external finishes and could tip over easily.

NOTE: For walls with more than one level, fix the entire lower level first. Continue to assemble subsequent levels once the lower level is fixed.

4.5 Following the layout plan, place the next **Durawall panel** so that it continues on from the first, seal joins with a bead of **mastic** approx. **20mm** from the outer edge of the panel. Insert **4no. (i) M8 x 20 Hex Nut & Bolts** to fix the panels together at each junction. Do not fully tighten at this stage. Continue until all wall panels are in place.

NOTE: If for any reason you cannot utilise the pre-drilled holes, drill a **10mm diameter** hole through the metalwork in the required position. Secure with the **(h) 10 x 19mm Hex Head Self-drilling Screws** supplied.

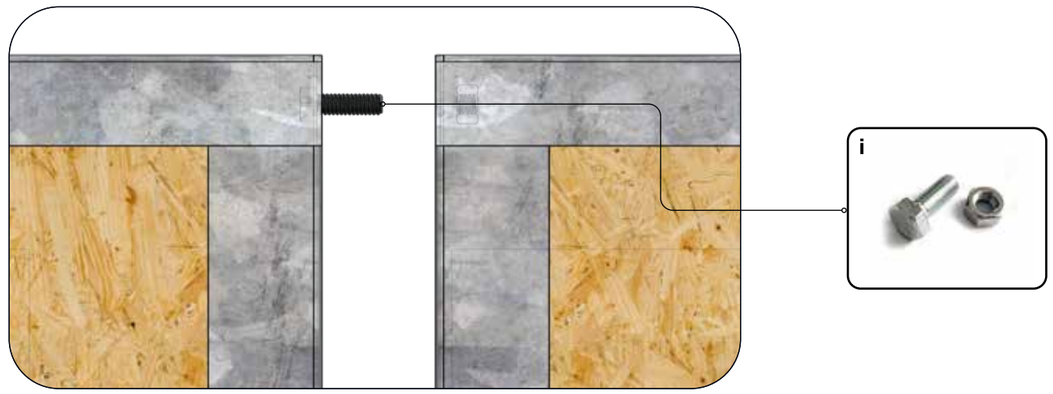

4.6 Once all **Durawall panels** are correctly sited, you can secure them to the house wall using the **(j) 60mm Nylon Frame Fixings**. Check that the panel is upright before drilling an **8mm diameter** hole **80mm deep** through the holes provided into the host wall.

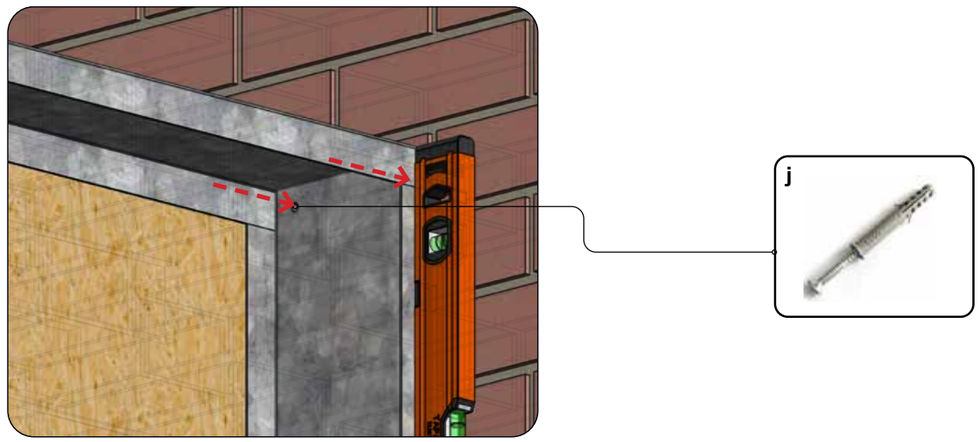

4.7 Once the **Durawall panels** are fixed to the host wall, check that all panels are in line. Where the skirt has the same finish as the walls, ensure the wall is set flush with the skirt. For render Durawalls and brick skirts, ensure the render wall is set back the thickness of the render finish being applied.

The panels can now be fixed to the steel base **edge beam** using the **(h) 10 x 19 Hex Head Self-drilling Screws** supplied. Fix the panel in the inside to the first joist **(g) 4.8 x 100 Csunk Self-drilling Screws** through each intersection.

NOTE: It will help to pre-drill the Durawall panels with a 5.5mm diameter drill, taking care not to drill through the steel base. Fix as close to the flange edges as possible and fix through double flanges where possible. Max spacing for fixings: 600mm on each edge.

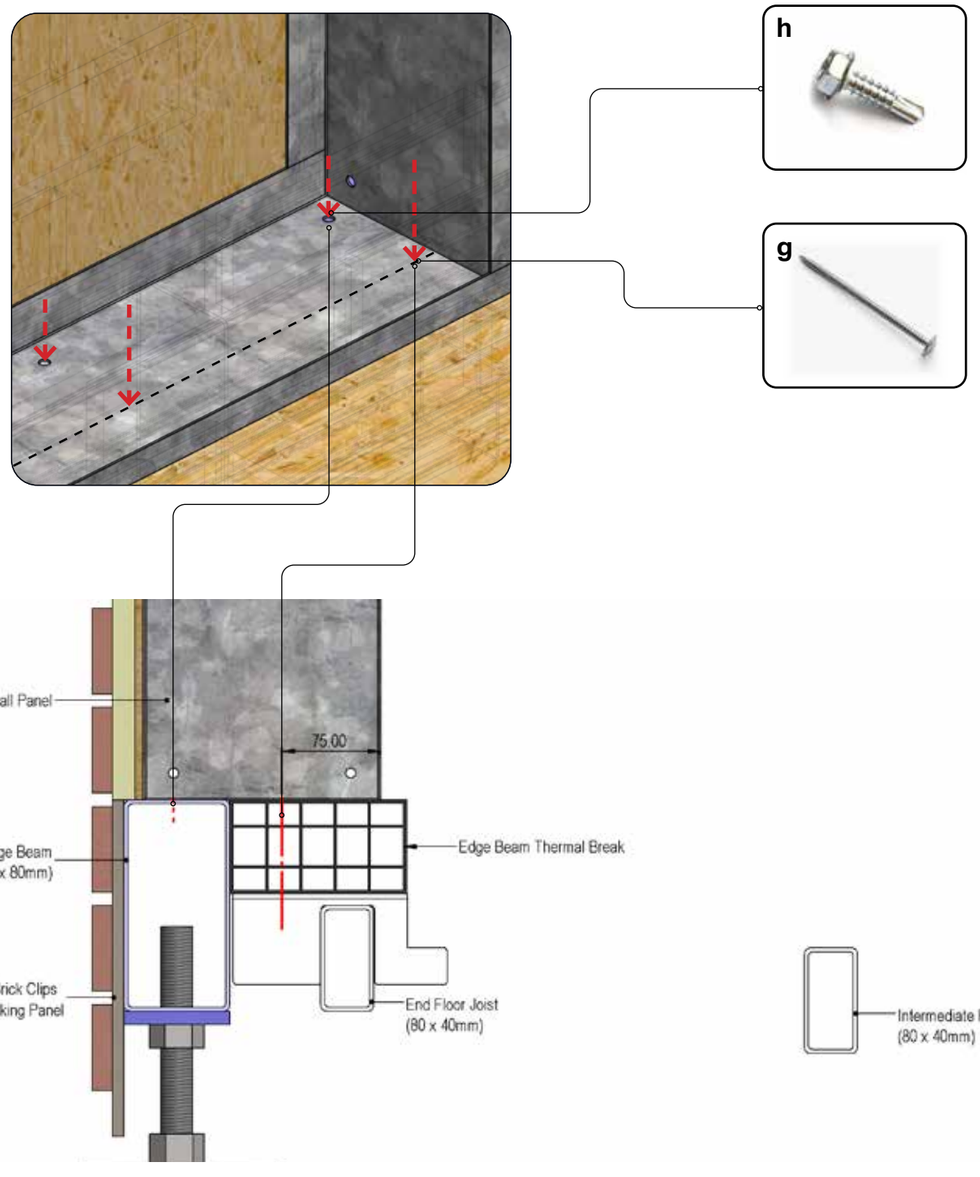

4.8 Once all panels have been correctly positioned and aligned, tighten all **(i) M8 x 20 Hex Nut & Bolts** to securely fasten the panels in place.

Durawall Assembly

4.9 Once fully constructed, seal the joins in the brick backer panels with the construction adhesive supplied. Use the same adhesive to stick the spare brick tiles in place.

NOTE: Be aware of the weather forecast during the building process, the construction adhesive supplied can be used in temperatures between 5°C and 35°C.

NOTE: You will need to use some 10mm spacers to position the brick slips on the skirt panels. Press bricks firmly into place.

4.10 To point the joints, mix the mortar supplied with water until a consistency of a stiff cream is achieved. Fill the joints around the bricks completely using a pointing bag, these can be purchased from Durabase. Ensure you follow the instructions on the mortar supplied.

NOTE: Check correct consistency by filling the bag, the mortar should hang from the end of the nozzle when the bag is shaken down.

4.11 Allow the mortar to dry until fairly firm. We would recommend that the mortar is firm enough that when pushed in with a finger only a small indentation is left behind. It should have a dull finish, be moist but not wet and somewhat gritty. Use a curved pointing tool to strike off mortar and then, when almost dry, remove any remaining mortar with a soft brush.

NOTE: Do not be tempted to strike off when the mortar is too moist. Overworking the mortar may create colour changes. Every time you work it, the moisture is drawn out and could result in a lighter-coloured mortar when dry.

NOTE: For render finish guidelines, please see page 26.

It is advised to fit the conservatory or remainder of the extension at this stage. Please follow your conservatory or extensions manufacturer's assembly guidelines. Conservatory cills can be secured to the top of the walls and steel base, using the 60mm long self-drilling screws supplied.

Rendering Guidelines

We advise all work should be carried out by competently trained people who have experience using render.

For render walls, when the Durawalls are in position, there should be a gap of approximately 3mm to 5mm between the edges of the external render board for correct jointing.

DO NOT apply sand and cement, monocouche, dash or thick coat render system to the render board supplied.

TAPING AND JOINTING

Immediately after installing the construction, protect the framework from weathering by filling all the joints. Fill the gaps between the board with exterior joint filler and then spread it over the face of the board, ready to take the tape.

Immediately embed Exterior Joint Tape (10cm) or Exterior Reinforcing Tape, centred over all of the joints. Scrape the excess exterior joint filler from the exterior tape leaving it just covered.

Cover the screw heads with exterior joint filler.

Corners are protected by applying an exterior basecoat and then embedding a corner profile in a similar way to the joint tape.

Reinforce window and door corners with extra pieces of reinforcing mesh, cut to size 50cm x 30cm, embedded into exterior basecoat as per corner profiles.

FINISHING

Refer to installation instructions from the selected render supplier.

To prevent damage caused by prolonged periods of wetting, it is preferable to stop the render above DPC level. Render should be applied at a minimum 150mm above ground level and above DPC. If applied under, a render drip should be used to stop damp bridging.

Internal Floor Assembly

NOTE This is a floating floor, so if finishing with a floor tile or similar, we recommend seeking advice. If extra fixings are required, long self-drilling screws are available from Durabase (price on request).

Tip: It is advised to make a note of the joist centres so that lines can be drawn on the flooring to guarantee the correct fixing down positions into the steel joists.

4.12 Lay the **moisture membrane** continuously across the **floor joists (80 x 40mm RHS)**, ensuring it is lapped up and over the **end floor joists (80 x 40mm RHS)**.

4.13 Deck out the floor area with **11mm boarding**, fixing down to the **floor joists (80 x 40mm RHS)** with the supplied **(f) 50mm Csunk Self-drilling Screws**.

4.14 Cut the **100mm insulation** to size filling the same area with the underfloor insulation. The top of the insulation should finish flush with the top of the **edge beam** and **edge beam thermal break**.

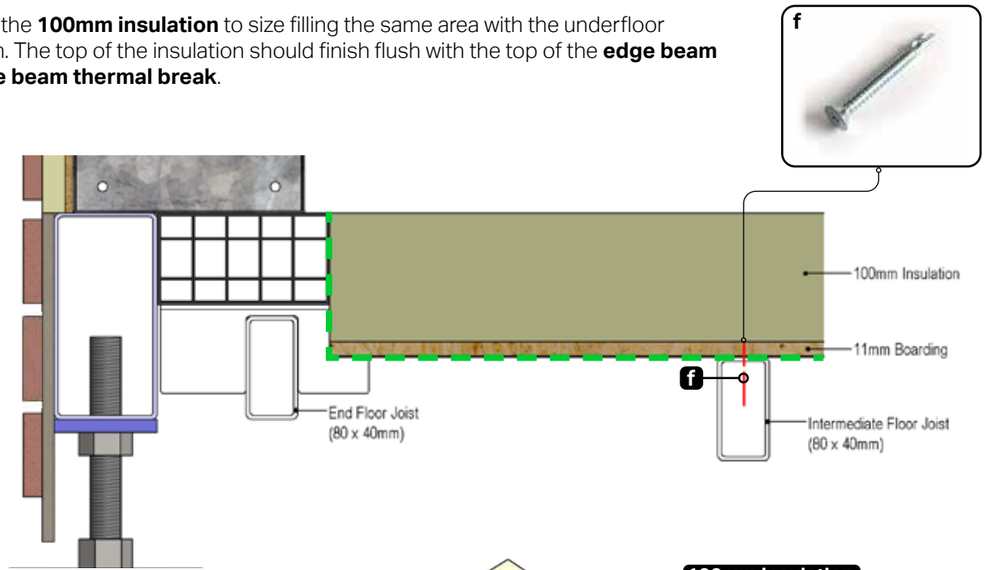

4.15 Tape all joints between **insulation boards** and seal all interfaces between the **insulation** and the **edge beam thermal break** with a suitable waterproof **foil tape**. Ensure continuity of the seal to minimise the risk of rainwater ingress reaching the **boarding** below.

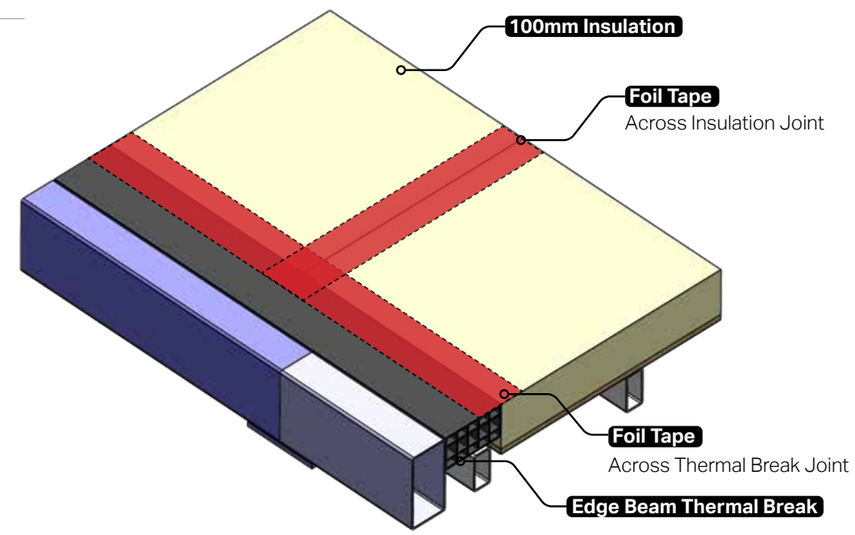

Internal Floor Assembly

4.16 Where a **radon barrier** (not supplied) is required, install the radon membrane continuously across the **edge beam**, **edge beam thermal break** and **insulation** ensuring it is fully sealed to adjacent membranes and construction elements in accordance with the manufacturer's recommendations. All joints, laps and penetrations must be appropriately sealed to maintain the continuity and effectiveness of the radon protection system. Any fixings passing through the membrane shall be sealed using butyl tape or an approved equivalent.

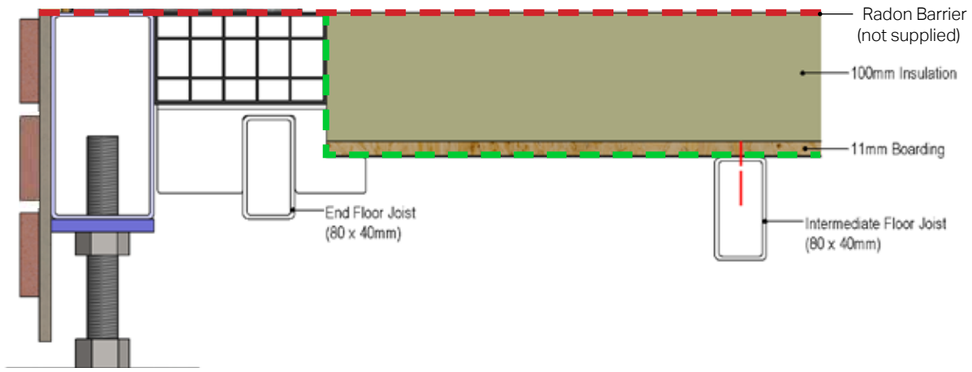

Once the roof has been installed and the extension is fully protected from external weather conditions,

4.17 Start laying the **22mm boarding** directly onto the **insulation** from the rear left-hand side of the base, looking towards the house. Lay the boards the correct way up as marked. Use the off-cut from the last run to start the next. It is advisable to glue the joints of the boards and to glue the boards to the insulation below. Water-proof wood glue should be used, but is not provided. **All board joints should be staggered.**

NOTE It is recommended to allow a 10mm expansion gap around the outside edges of the flooring. The floor is now ready for finishing with your choice of covering.

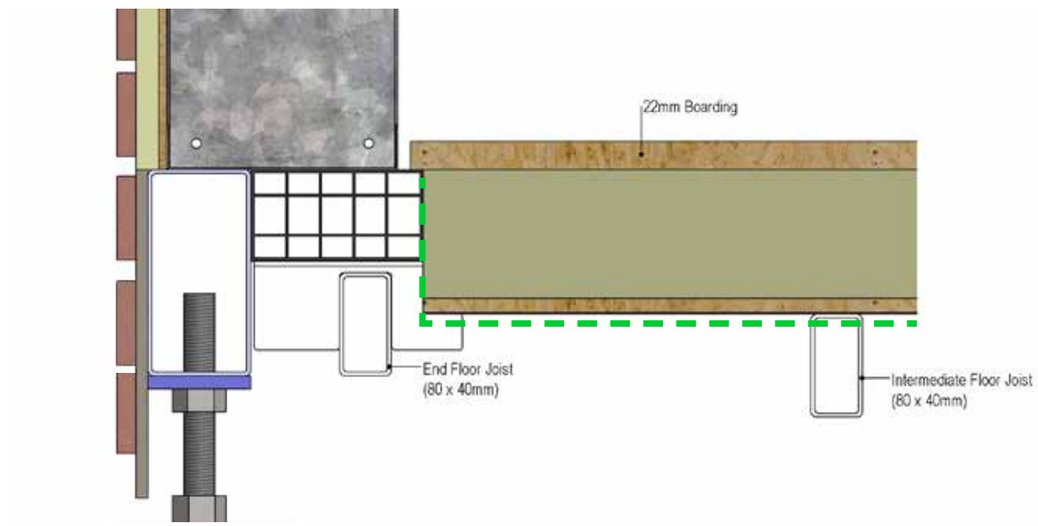

4.18 Install the supplied **mineral fibre insulation** within the sections of the **Durawall panels**. Any electrical services or plumbing routes that pass through the panels should be installed at this stage. A suitable **vapour control layer (VCL)** must then be fitted to the internal face of the Durawall panel and secured in accordance with the manufacturer's instructions.

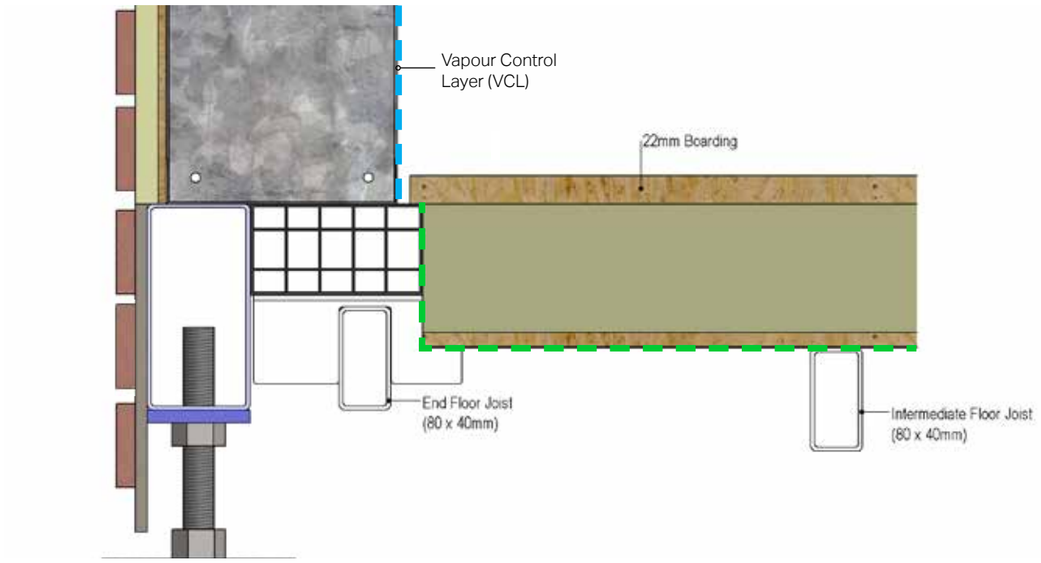

NOTE Finish the walls internally according to the spec required for the project.

Durabase 30 minute Firewall – Required Contents (Render and Brick Finishes)

The Durabase 30 minute Firewall must include all components shown on the approved drawings below to pass building regulations.

All required items and actions that are not part of the pre-fabricated wall on delivery are clearly highlighted in red on the cross-sections below. The highlighted items ensure that every component required to achieve the correct fire performance are identified, supplied, and installed in accordance with the Durabase specification.

Item brands must match the listed items, and it is the responsibility of the building supplier to ensure that items match the specification required to pass building regulations.

Durabase - Brick firewall wall makeup

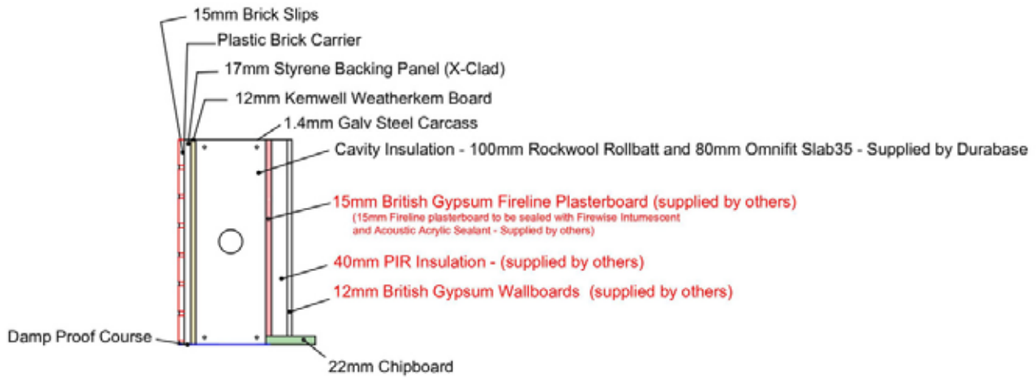

Durabase - Render firewall wall makeup

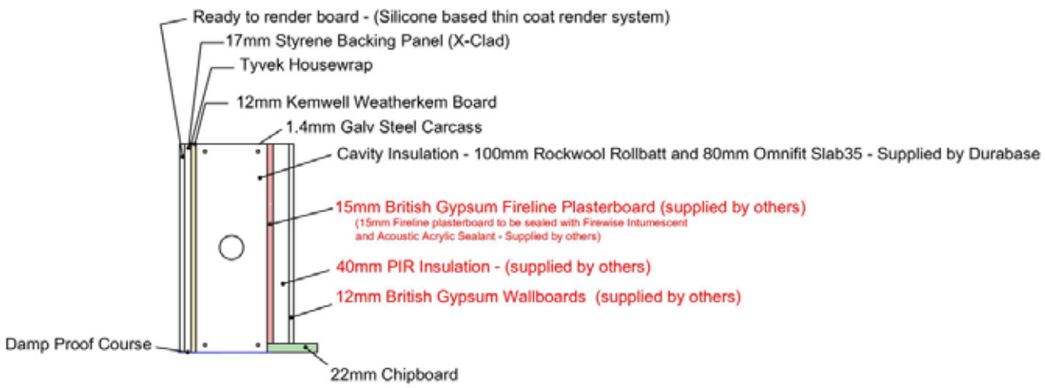

Durabase building regulations external wall specification - Non Firewall Brick Finishes

The Durabase building regulations approved external wall (Non Firewall) must include all components shown on the approved drawings below to pass building regulations.

All required items that are not part of the pre-fabricated wall on delivery are clearly highlighted in red on the cross-sections below.

All highlighted items must be sourced and fitted correctly as shown in the cross-sections to ensure that the wall system is working to the required levels. It is the responsibility of the building supplier to ensure that items match the specification required to pass building regulations.

Durabase - Brick firewall wall makeup

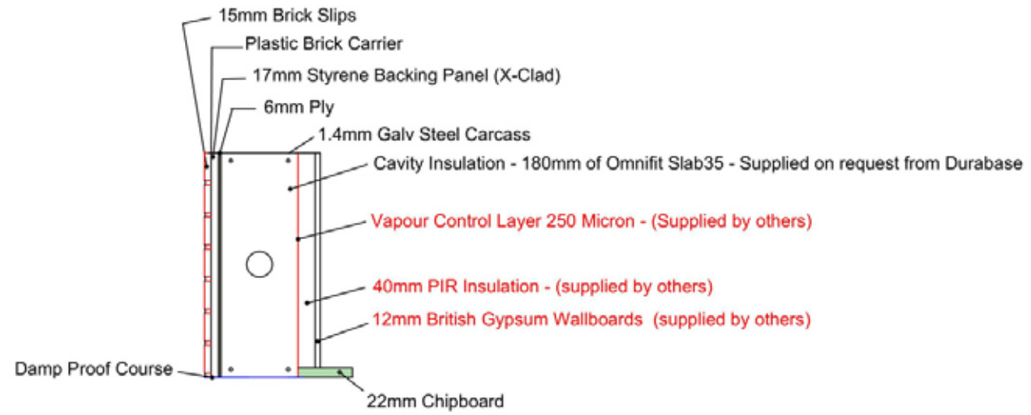

Durabase - Render firewall wall makeup

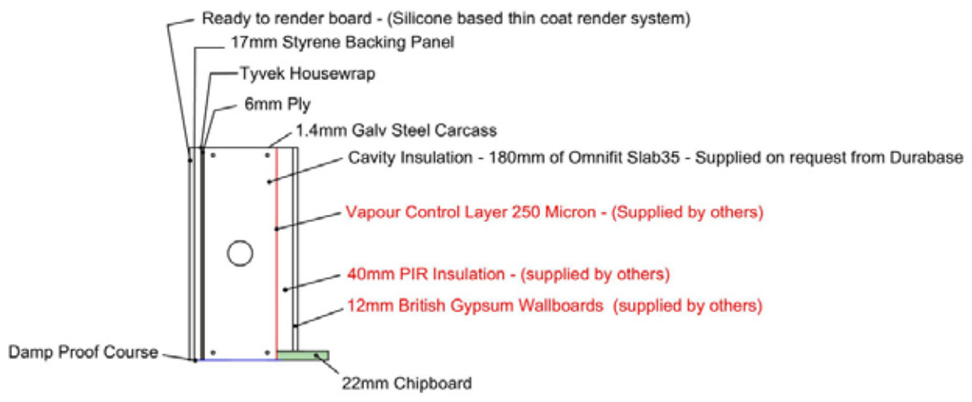

DURABASE
BUILDING FOR THE FUTURE

Durabase a trading name of Wye Valley Engineering Ltd.
Durabase House, Netherwood Road, Rotherwas Ind. Estate
Hereford, HR2 6JU

JN: 9282 09/26 V3-

www.durabase.co.uk | 01432 266507 |