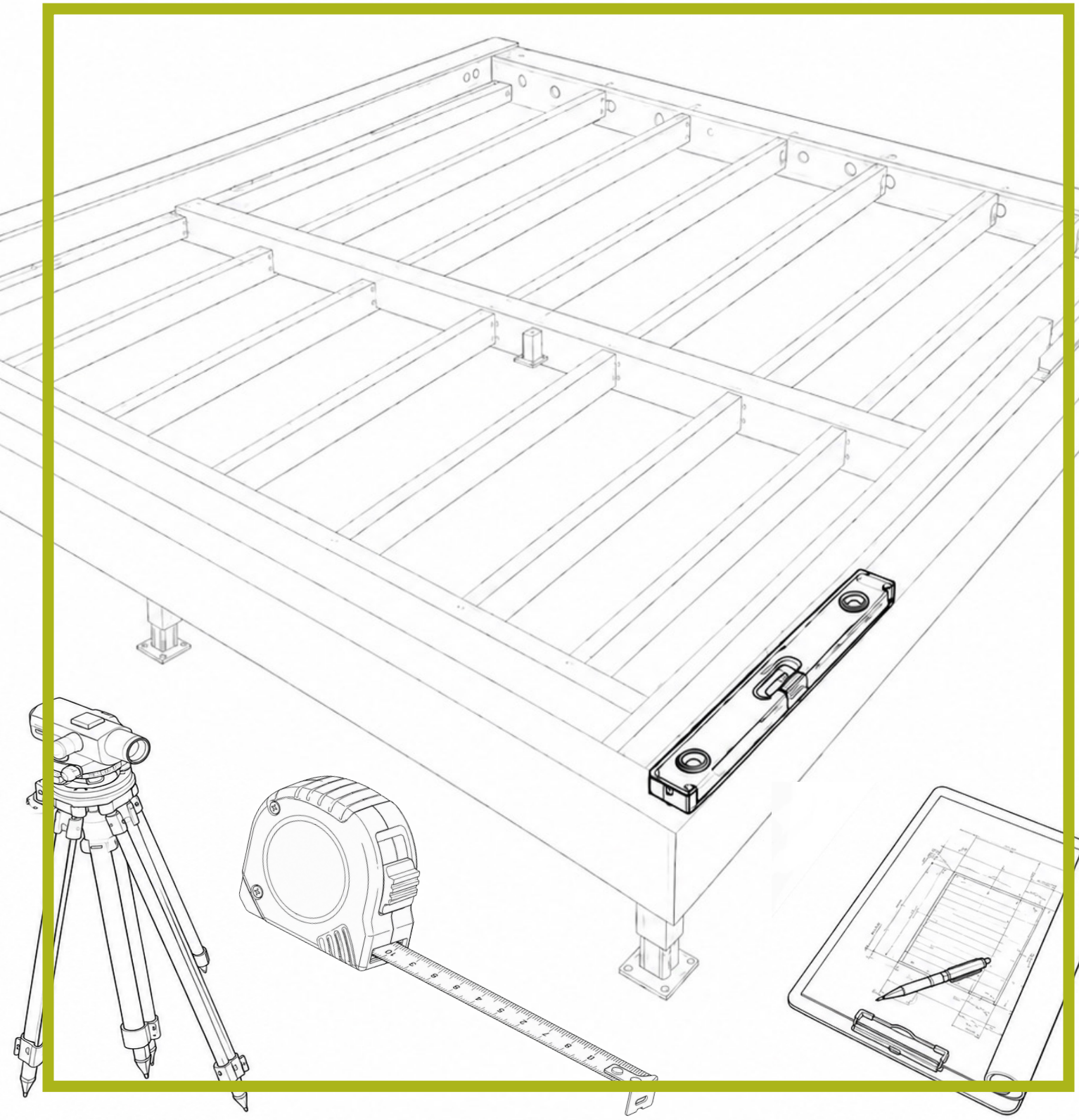

SURVEY AND ORDER GUIDE

v2 | 07.26

DURABASE

BUILDING FOR THE FUTURE

10 YEAR GUARANTEE

TRADING SINCE 1986

www.durabase.co.uk | 01432 266507

The purpose of this guide is to walk you through each stage of a Durabase site survey, ensuring that all relevant and required information is collected and ready for the order to be completed and processed. It is designed to give you peace of mind that every order has been submitted successfully with all the necessary information included.

WHAT YOU NEED TO COLLECT

The information you are collecting during the survey helps complete the order form shown below. The full order form can be found on our resources tab of the website, and a copy is at the back of this guide.

DURABASE
BUILDING FOR THE FUTURE

QUOTE ☐ **ORDER** ☐ (please tick appropriate)

Delivery address
Invoice to
Order date
Postcode
Reference
Telephone number
Order number
Email address
W/C date required
Print name
Signature

PRODUCTS TO ORDER

Durabase only ☐ Durawall only ☐ Both ☐

DURABASE DETAILS

BASE TYPE
- ☐ Durabase 50 (Non Regs)
- ☐ Durabase Plus 100 (Building Regs England/ Wales)
- ☐ Durabase Plus 120 (Building Regs Scotland)
- ☐ Freestanding Base

FOUNDATIONS
- ☐ Concrete Pad
- ☐ Ground Screw

WALL DETAIL
- ☐ Durawall
- ☐ Full Height (glass to ground)
- ☐ SIP (SIP/timber walls - supplied by others)

SKIRT FINISH
- ☐ Plain
- ☐ Brick Slips

Brick Type:

MORTAR COLOUR
- ☐ Grey
- ☐ Sand
- ☐ Red

CRITICAL DIMENSIONS

Overall width (External Sizes)
Overall projection (External Sizes) Mtrs
Durawall height above DPC Firewall Required? (Show on Plan)
Height Ground to DPC

Understanding the base type you require before a survey will ensure you collect the correct information from the site and the order is correct.

SURVEY AND ORDER GUIDE

This guide consists of 9 simple site survey steps and 4 actions to finalise an order.

INITIAL SITE SURVEY

1. Identifying the location of the Durabase.
2. Determining the screed level of an existing property.
3. Marking the new Durabase DPC level on the property.
4. Marking the Durabase back cill location on the property.
5. Measuring the Durabase DPC to the existing garden ground level.
6. Identifying obstructions on the house wall.
7. Identifying obstructions related to drain runs.
8. Are bridging lintels required?
9. Photos from the site.

FINALISING THE ORDER

1. Walls and door openings.
2. Foundation type being used.
3. Wall and skirt finish.
4. Final details and considerations.

EQUIPMENT

To survey a Durabase, you will need the following equipment:

- Spirit level - 1200mm (4ft) and 1800mm (6ft)
- Plumb bob and line set
- Tape measure
- Pencil and black marker pen
- Line marking spray paint (if suitable)
- Pack of glazing packers
- Line, stakes and line level - You can use a laser level and receiver set if you are familiar and confident; this can save time, but may not be suitable on all sites.

The site survey is to be undertaken by a competent person alongside the completion of the Durabase quote or order form to ensure all relevant information is collected.

NOTE: Carefully filling out each section of the quote/order form helps avoid mistakes or assumptions.

BASE DATUMS

Durabase 50 - Non-Building Regulation - Ideal for conservatories or garden rooms.

Durabase Plus 100 - Building Regulation compliant for England and Wales.

Durabase Plus 120 - Building Regulation compliant in Scotland.

For bases that are for SIP or timber walls, select the SIP option on the order form. SIP and timber walls are not supplied by Durabase.

DATUMS EXPLAINED

The Durabase has two main datum points that need to be transferred to the outside of the existing property to ensure the levels of the base are correct: **Base DPC and top of back cill.**

Base DPC (top of base steel)

This is the datum you measure from when you are working out the ground height around the base. Base DPC to ground.

This same datum is the reference point we refer to on a pad or screw plan for the measurement that screws or pads need to be from.

Top of back cill

The top of the back cill datum is the correct position to fit your back cill, and measuring down from this mark 150mm gives you the correct minimum air gap that is required under a base.

OTHER SPECS

All Durabases require a minimum 150mm air gap from the top of the back cill to the ground dug out under; this air gap is essential for the entire area, not just the perimeter. A small amount of ground excavation may be required to get to these levels. This ensures there is adequate air flow under a base to pass Building Regulation requirements. Air flow under the base ensures moisture levels are regulated and no negative effects of moisture are caused.

Air bricks in base skirts are required to be placed at least **75mm to 150mm** above the finished external ground level. This height prevents surface rainwater from pooling into the vents, reduces splash-back from the ground, and ensures airflow is not obstructed by garden overgrowth, mulch, or gravel.

DATUM GUIDES - PAD AND SCREW

DURABASE 50 - PAD OR SCREW COMPATIBLE

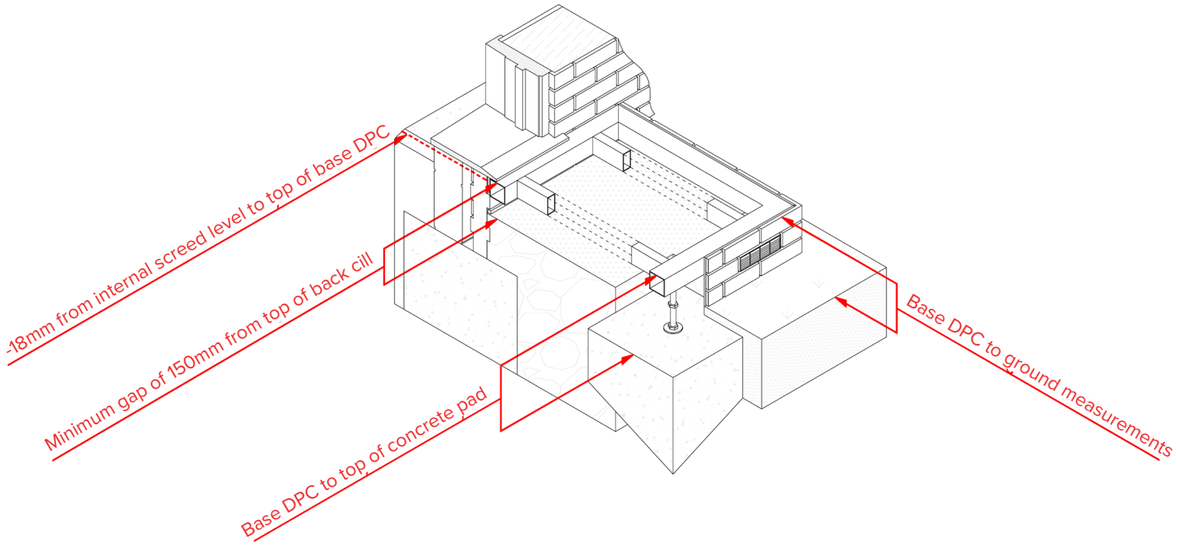

DURABASE PLUS 100 - PAD OR SCREW COMPATIBLE

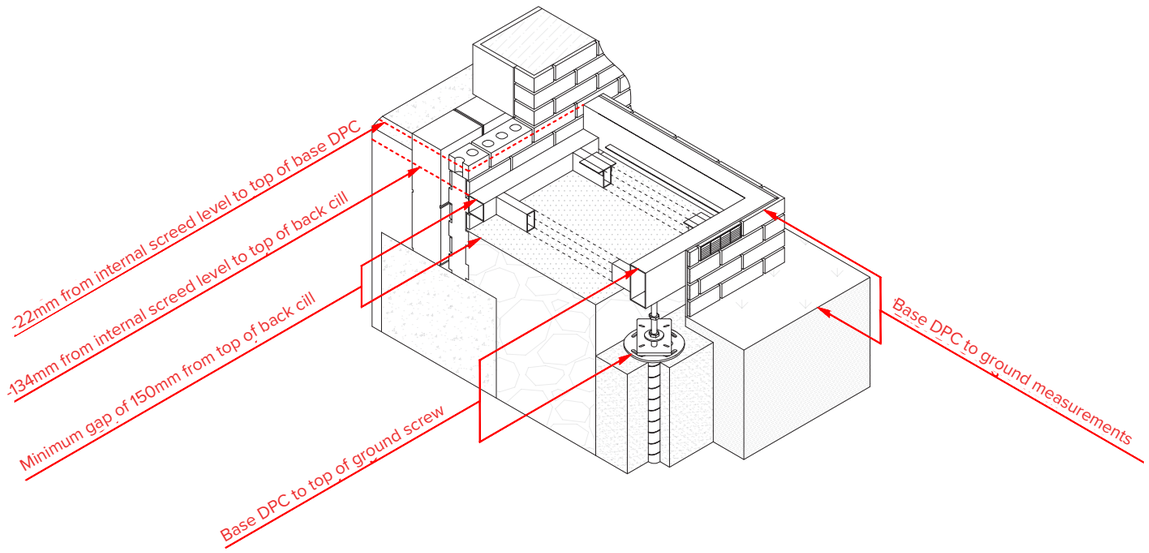

This survey guide is based on a Durabase Plus 100 as its example. If you are not ordering a Durabase Plus 100, ensure you read thoroughly to see alternative base type notes on each relevant section.

1. IDENTIFY THE LOCATION OF THE DURABASE

Measure the footprint of the extension accurately in relation to the location it will be fixed to the house (external finish sizes), using line marker paint, if appropriate, mark its position. Once this base location has been determined and marked, accurately fit the stakes around the perimeter. These will later be used for determining the base DPC to ground measurement.

TIP: Measuring diagonally across the base footprint from corner stakes to the house wall where the extension is marked is vital to ensure the base has been marked out square.

Check the house wall the base will be fitted to for level. If the wall is angled in or out, this will affect the base position/size when the walls are fitted.

If the wall is leaning outwards, a plumb line should be fixed to the highest point where the roof will touch the wall. Where the plumb line meets the floor is where the base should be set out from (SP). The gap will need to be filled with packers (not supplied). The base and wall size will need to start from this point.

If the wall leans backwards, the base should be started against the wall (SP). The gap in this situation is at the top; therefore, packers (not supplied) will be needed to ensure the wall is fixed in the correct position and level.

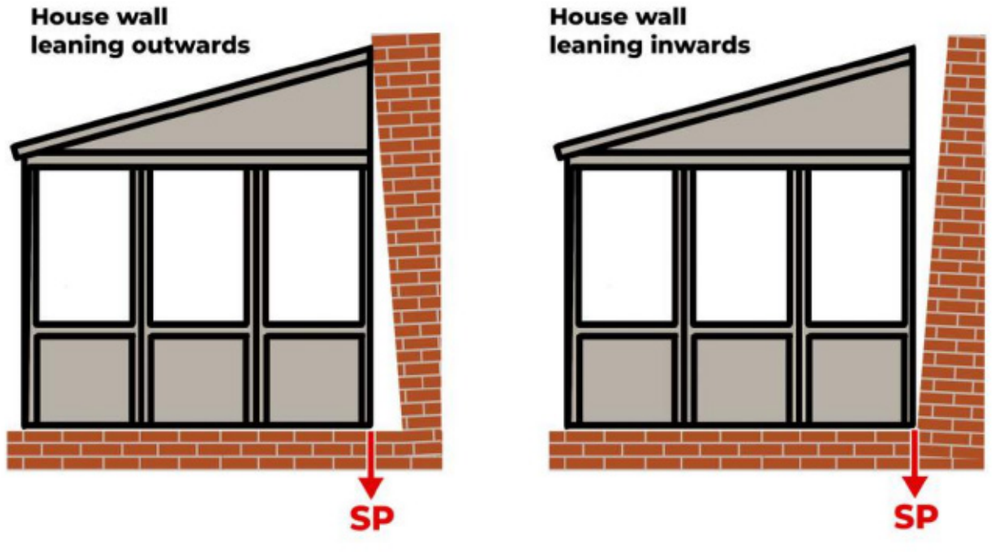

2. DETERMINE THE SCREED LEVEL OF THE PROPERTY

Using a door (preferred) or window opening, place a spirit level on top of the threshold spanning equally inside and outside of the opening, ensuring the level is plumb. Measure from the threshold (underside of the spirit level) to the floor screed using a tape measure.

If you can't measure to the screed level, measure to the finished floor and subtract its thickness to get the required measurement. This may need to be an assumption for the floor's thickness, but at this stage, a few millimetres either way will not be an issue.

NOTE: Often the house screed will be in line with the house DPC or tight to the underside of a door cill. This is an assumption and shouldn't be used as a certain datum. Following the process listed ensures the true screed level is found.

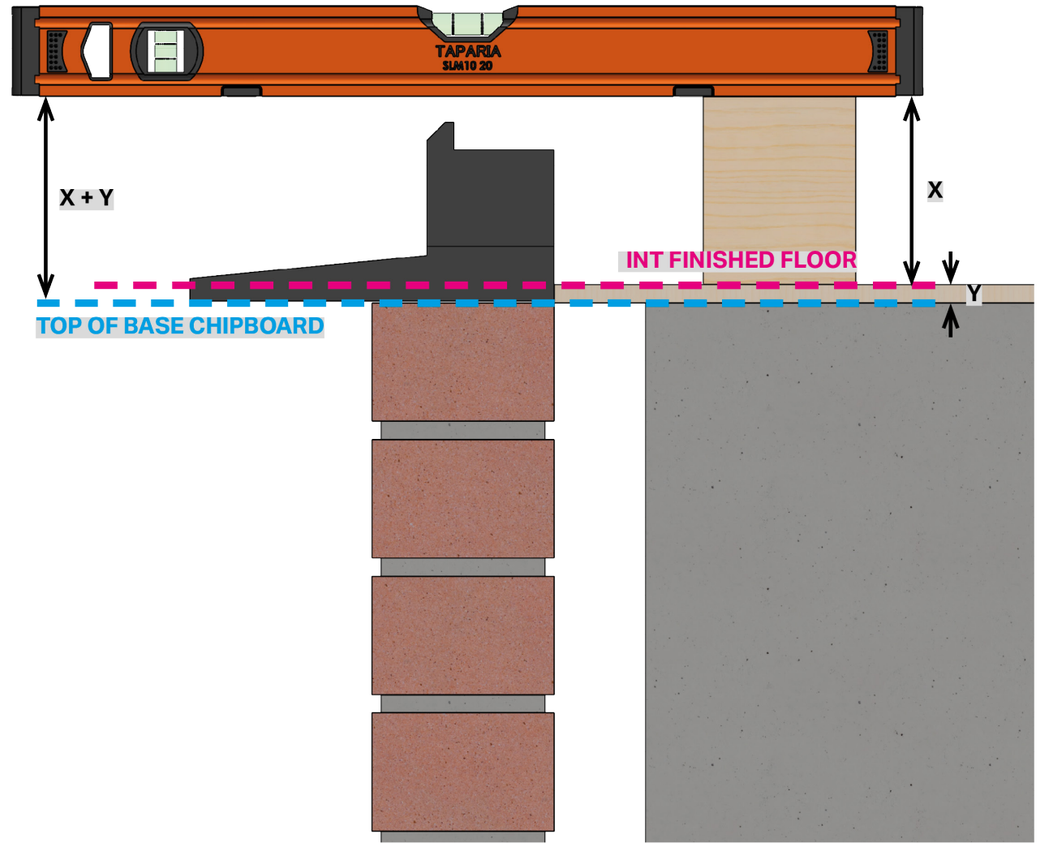

TIP: To secure the spirit level and free up your hands use the glazing packers on the inside of the property to hold it level.

Now transfer the measurement from the underside of the spirit level to the outside of the property.

TIP: If the door cill or a step is obstructing the transfer of the measurement, place the level on a diagonal to the edge of the brick return. This will give you extra length past the cill to transfer the measurement.

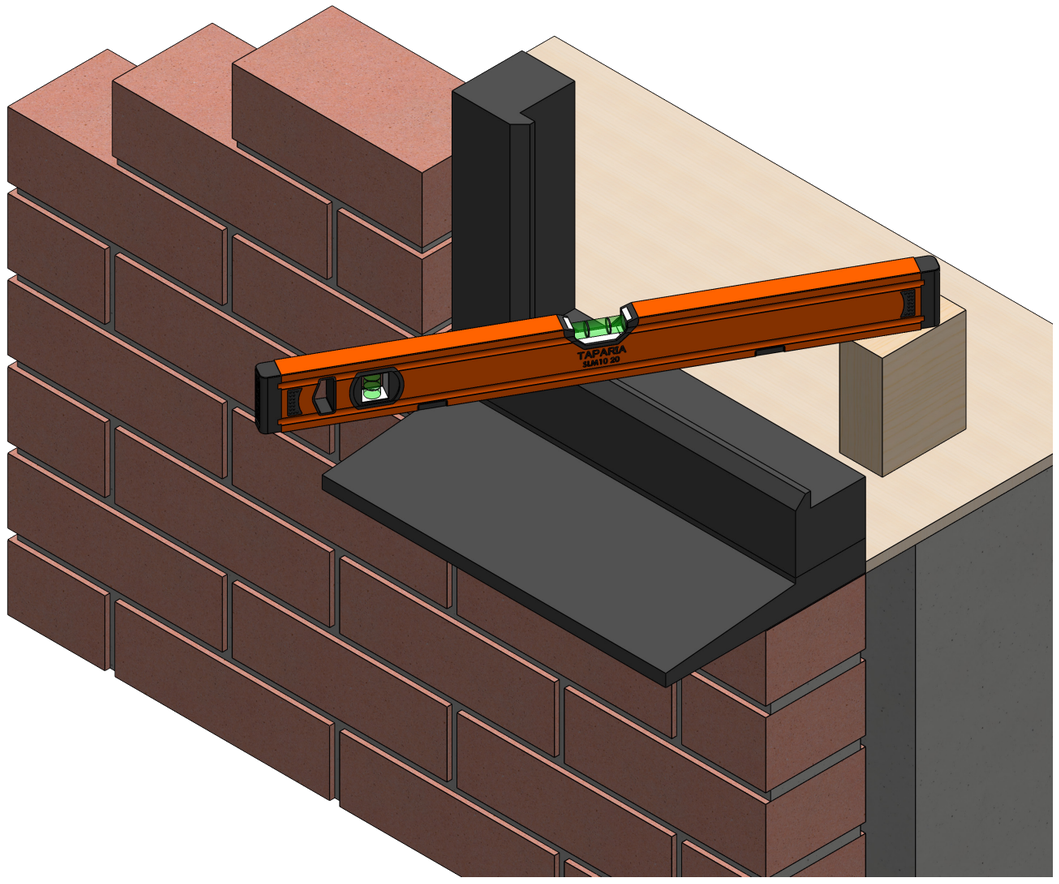

SITE SURVEY

3. DETERMINE THE DURABASE DPC HEIGHT

If you are working to achieve a level transition from the new base to the existing property, the internal screed of the property corresponds with the top of the 22mm chipboard (the Durabase 50 floor thickness is different, see notes below).

Now that the internal screed level has been determined and marked on the outside wall, **you need to then mark 22mm down from this point, which gives you the base DPC.** The house DPC has no impact on the durabase setting out position.

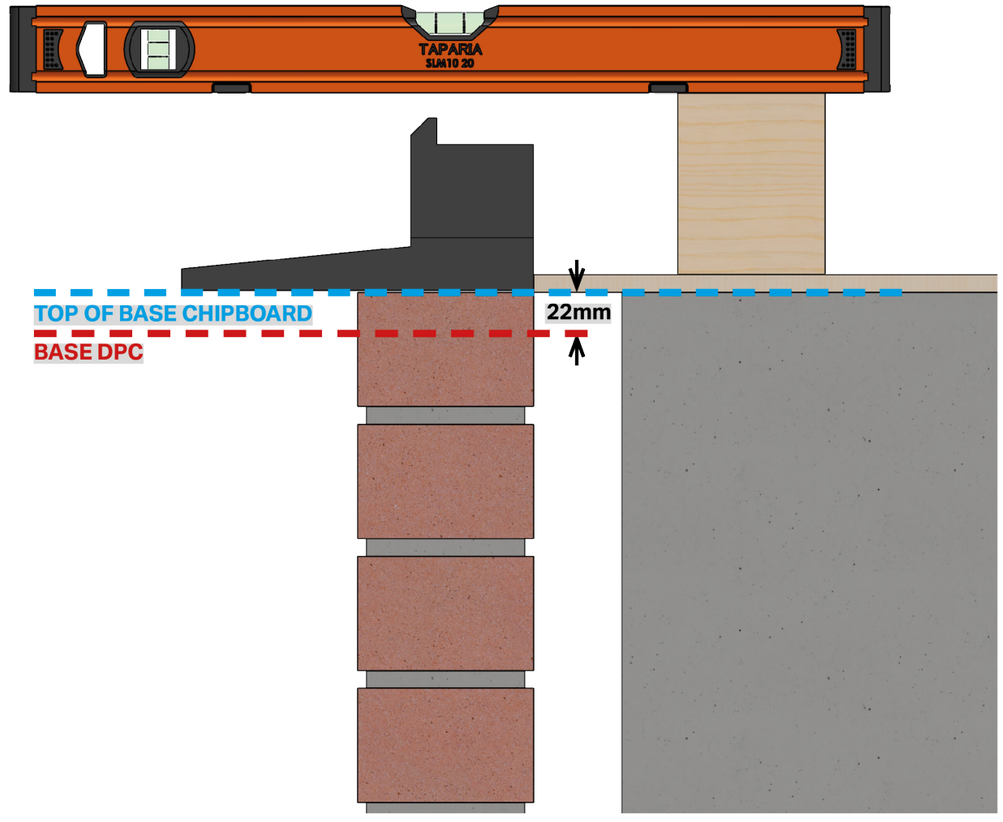

NOTE: On a Durabase 50 the flooring thickness is 18mm and the base DPC is also the back cill height. Measuring 150mm down from the top of the back cill gives you the required air gap on a Durabase 50. Also, giving you the required excavation depth for pricing purposes. **You can skip to point 5. Measuring base DPC to ground level.**

4. DETERMINE TOP OF BACK CILL HEIGHT

Marking the top of the back cill requires you to measure 134mm down from the internal screed mark on the outside of the property. This gives you the location you need to bolt on the back cill. Measuring 150mm down from the top of the back cill also gives you the required **air gap** that may need to be excavated.

NOTE: This gives you a clear idea of the amount of labour and waste disposal required to get an accurate price.

Ensuring these marks are clear on the external wall of the property will help avoid mistakes.

NOTE: On a Durabase Plus 120 you will need to measure down 154mm from the internal screed mark to allow for the thicker insulation required on Scottish bases.

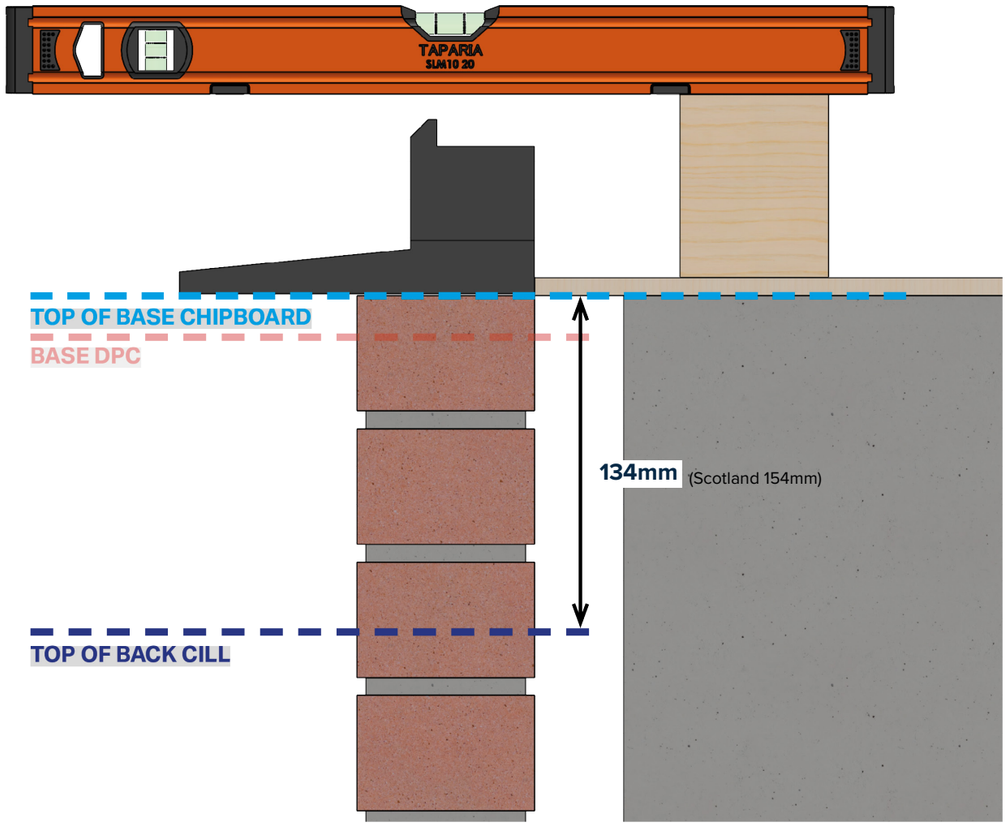

5. MEASURING THE DURABASE DPC TO GROUND LEVEL

Before we measure the base DPC to ground measurement, which gives us the information we need to calculate the base skirts and ensure we manufacture the base suitably, we need to set up either our string line or laser.

NOTE: Bases over 225mm from base DPC to the ground require extra steel on the underside of the ring beam to ensure strength and skirt stability.

Using the stakes, set up a builder's line and line level around the perimeter of the proposed base area at the **base DPC level** marked on the house wall.

Going around the base footprint, identifying the lowest areas, measure down from the line with a tape measure to identify the base DPC to ground measurement. Be sure the line is tight and level at all times.

If you are using a laser, set up the laser and receiver to allow you to collect the DPC to ground measurement.

If you are working on a level site and the various DPC to ground measurements are within 20mm-30mm, specify the deepest measurement as the average.

Fill out the relevant section on the quote/order form or survey drawing.

IMPORTANT: If the ground level varies drastically (sloping ground), mark each base DPC to ground measurement on a base plan with the measurements roughly 1 metre apart.

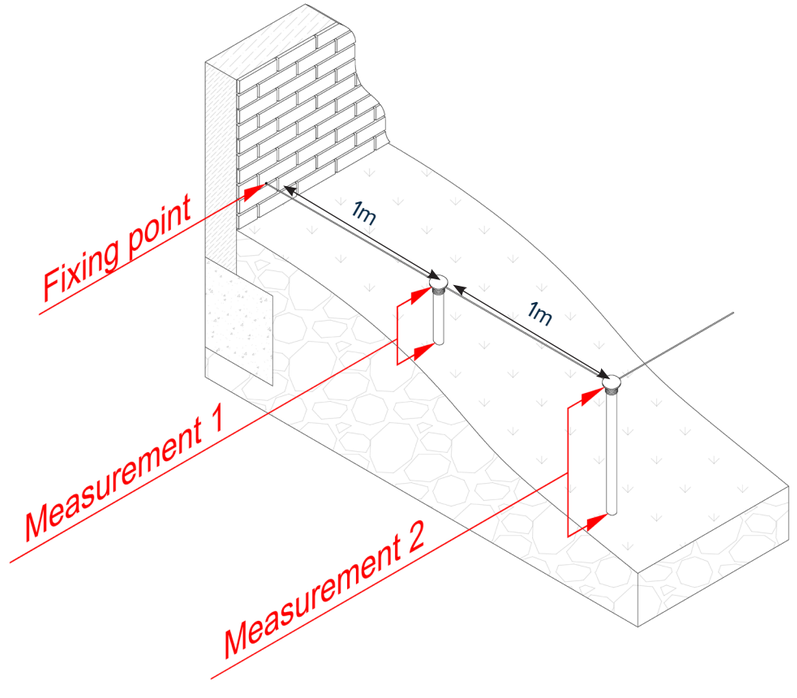

6. OBSTRUCTIONS ON THE HOUSE WALL

Using a manufactured profile, a Durabase can be manufactured to avoid many obstructions you may come up against on a building site. These can include drains/sink waste, soil pipes, air bricks in existing houses, gas/electrical lines or vertical profiles e.g. chimney breasts or a bay window.

Drawing any obstructions on the base plan is vital for the team to be able to manufacture a profile to avoid such obstructions. These measurements should be taken from the outside edge of your extension to the obstruction, allowing a good amount of tolerance, at least 25mm on either side of the obstruction.
We do not allow tolerance on any measurements given.

IMPORTANT: Always measure obstructions from the same point to avoid mistakes, for example, the left-hand edge of the planned extension or conservatory.

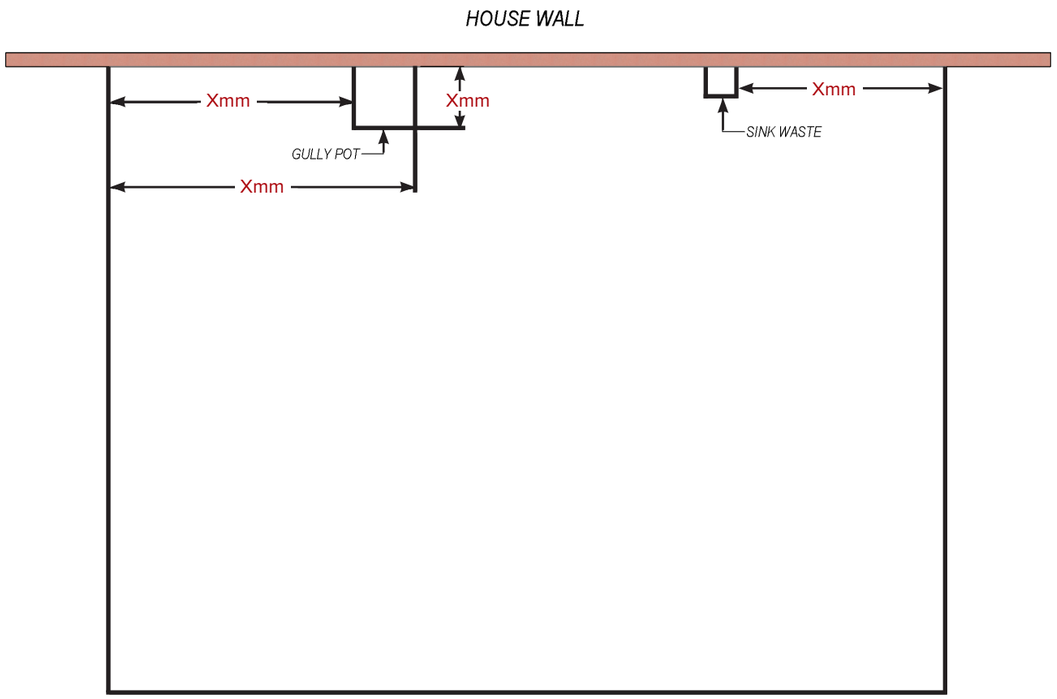

TIP: The more tolerance, the better, as profiles cannot be edited on-site.

7. IDENTIFYING OBSTRUCTIONS RELATED TO DRAIN RUNS

Inspecting the site for drainage runs is very important to avoid unexpected costs and delays at a later date. Checking along the house walls looking for waste pipes, gully pots and inspecting the entire site for manholes will help you identify drainage routes.

If you find drainage runs, they should then be drawn (with tolerance) on the base plan to inform us of their location and direction.

TIP: Lifting the manhole cover will assist in working out drainage run directions.

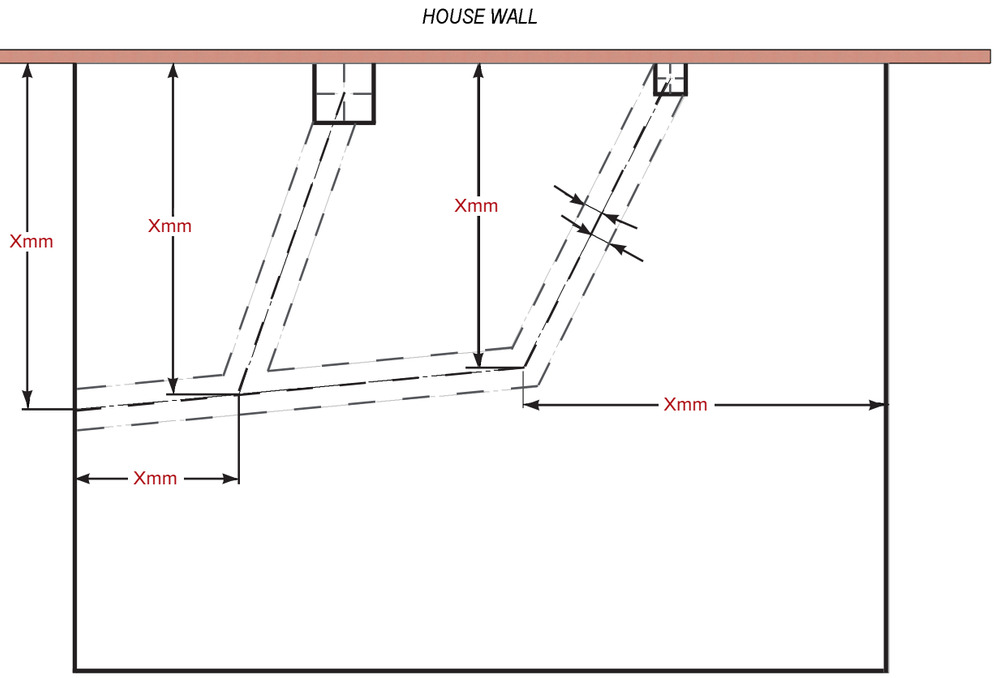

Pad or Screw plans will be drawn to suit drainage runs, but build over agreements are not the responsibility of Durabase. A distance is often specified in a build over agreement that dictates how close we are able to put a footing to a pipe. All of these things need to be confirmed and specified before the order is placed. Any information that is not collected at this point will cause delays to the project as we wait.

Manhole inspection openings can be included in bases if required to assist with rodding or manhole maintenance at a future date. These are covered by the finished floor but are an option in an emergency. All drains that remain under the Durabase should be double sealed, and rodding locations outside of the base's perimeter are strongly advised.

8. BRIDGING LINTELS

If a drain run interferes with a leg position, a galvanised bridging lintel that spans the obstruction can be supplied by Durabase at an extra cost.

The bridging lintel has a depth of 180mm and requires the pads or screws in that location to be set deeper.

It is recommended that any cutting and drilling of the lintel on site is treated to prevent rust

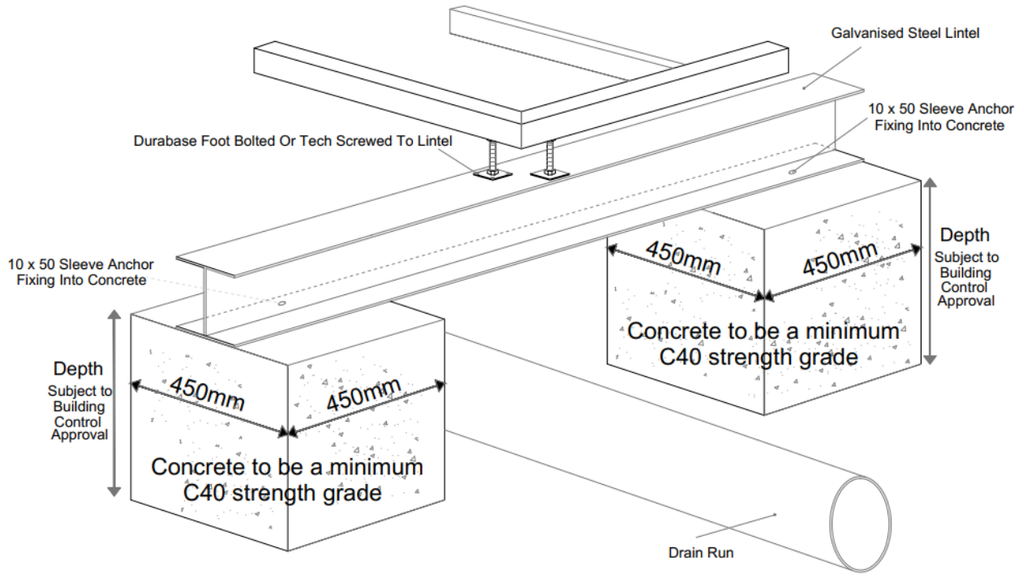

NOTE: The screws or pads that need to be deeper will be specified on the screw or pad plan provided.

Should you require a bridging lintel, it is important to work out the depth of the pipe that is being bridged to ensure the bridging lintel can pass over the top of the obstruction without fouling it.

IMPORTANT: A base DPC to the top of the pipe measurement must be included on the survey.

At the survey stage, it is likely you will only be able to notify us of potential bridging lintels required on the corner of the base, as you can see from the base perimeter you have marked out, whether a pipe will run past it.

We may have to add extra bridging lintels on some jobs post survey if we discover they obstruct other leg positions. These will need to be charged at an extra cost.

Having an accurate drain run is extremely important for the design of the base and to ensure you have no unforeseen errors when fitting foundations.

9. PHOTOS FROM THE SITE

Once the main survey has been completed, it is advised to take a few photos of the house wall that the Durabase will be connecting to and the area where the base will be fitted.

This helps our teams understand a site's requirements, and also allows us to double-check a site to ensure nothing obvious has been missed.

These photos should then be sent along with the completed order.

1. WALLS AND DOOR OPENINGS

All plans require the location and size of door openings to be shown, no matter who is supplying the walls. This needs to be included on the order form and base plan.

If you are purchasing Durawall, the position and height of the walls should also be shown on the base plan.

NOTE: Durabase works to brick height, which is in increments of 75mm.

Door and window openings are to have the tolerance already allowed on the plans.

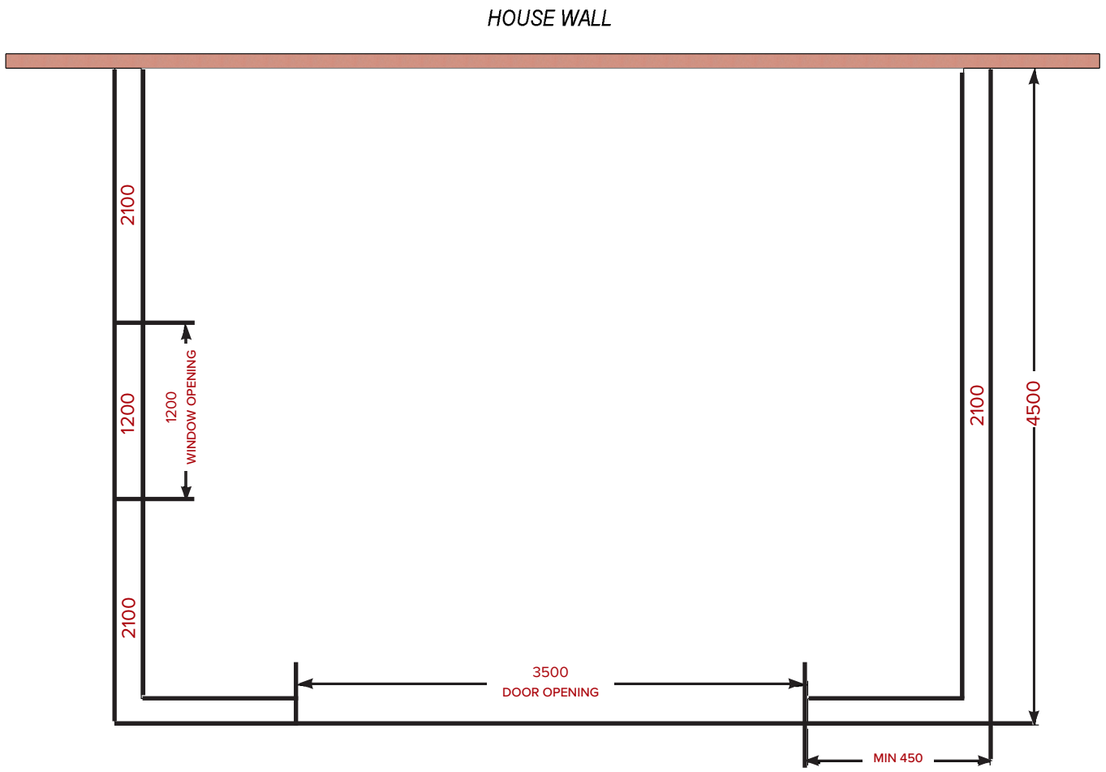

IMPORTANT: Durabase at no stage adds tolerance to any measurements given.

FINALISING AN ORDER

2. FOUNDATION TYPE

A Durabase can be fitted on two main foundation types: concrete pads or ground screws.

Specifying the foundation type and ensuring this does not change ensures the base plans you receive after the order are correct.

No ground screws or pad materials are supplied by Durabase.

NOTE: Ground screws are not supplied and will need to be installed by a separate ground screw company. Orders must be submitted with all the required information before pad or screw plans can be issued. Allow a minimum of 5 working days after the order to book a ground screw company to come and fit screws.

3. WALL AND SKIRT FINISH

Deciding the wall and skirt finish needs to be completed before processing the order.

The range of bricks available are listed on the brick chart on our website, and mortar colours are listed on the order form.

NOTE: A plain wall or skirt is for cladding or painting and is not to be rendered. Render should not be applied below the base DPC (skirt level), and a brick skirt is advised. These four brick slip options are for the skirt only.

4. FINAL DETAILS AND CONSIDERATIONS

At this stage, the main elements of the site survey have been completed and should have been filled out on the order or survey form.

Some final selections that may apply to you.

Freestanding? Is the base you are using a freestanding base that has no host wall? If so, please select the freestanding option.

Is the Durabase being fitted in Scotland? If the base is being fitted in Scotland, it requires a thicker insulation to be supplied for it to pass Scottish Building Regulations. Please specify that the base is to be Scottish spec (Durabase Plus 120).

Build over agreements will likely need to be agreed with local water authorities, so check the type of pipe and whether it is private or not.

Site storage - When the Durabase is delivered, it can take up a lot of space, so having a plan on where you store the materials can help to avoid the product getting damaged by the weather or being stacked incorrectly on the day of delivery.

FINALISING AN ORDER

Radon - Durabase does not supply, install, or accept responsibility for the radon barrier system. Responsibility for its specification, detailing, installation, and performance rests solely with the appointed designer and installer.

Where radon protection is required, the Durabase system may be used in conjunction with a suitable radon barrier, which must be installed fully in accordance with the membrane manufacturer's instructions and applicable building regulations.

Potential delivery delays - If survey details are missing or not submitted at the time of order, delivery dates can be pushed back while we wait for details. To avoid this, ensure the survey has been thoroughly completed and processed.

Ground screw or pad plans - Plans are issued at the first opportunity post the confirmed order being placed.

Screw and pad packs include detailed foundation position plans, including a cross-section showing the height required from the top of the screw or pad to the base DPC (top of steel). Screw or pad packs also include a datum guide and a base labelling map that corresponds to identification numbers welded to each member of the base, assisting in setting out before fitting.

The depth of pads or screws is to be determined by either the screw company, undertaking the work or, in the case of pads, by a structural engineer who is considering all loading and site details.

It is the responsibility of the ground screw supplier to demonstrate that the applied vertical and horizontal forces can be resisted by the installed ground screws. A test certificate that states the passing of the required standard for building control must be supplied to customers once the job is complete.

DURABASE
BUILDING FOR THE FUTURE

QUOTE ☐ **ORDER** ☐ (please tick appropriate)

Delivery address

Invoice to

Order date

Postcode

Reference

Telephone number

Order number

Email address

W/C date required

Print name

Signature

PRODUCTS TO ORDER

Durabase only ☐ Durawall only ☐ Both ☐

DURABASE DETAILS

BASE TYPE
- ☐ Durabase 50 (Non Regs)
- ☐ Durabase Plus 100 (Building Regs England/ Wales)
- ☐ Durabase Plus 120 (Building Regs Scotland)
- ☐ Freestanding Base

FOUNDATIONS
- ☐ Concrete Pad
- ☐ Ground Screw

WALL DETAIL
- ☐ Durawall
- ☐ Full Height (glass to ground)
- ☐ SIP (SIP/timber walls - supplied by others)

SKIRT FINISH
- ☐ Plain
- ☐ Brick Slips

Brick Type:

MORTAR COLOUR
- ☐ Grey
- ☐ Sand
- ☐ Red

CRITICAL DIMENSIONS

Overall width (External Sizes)

Overall projection (External Sizes) Mtrs

Durawall height above DPC Firewall Required? (Show on Plan)

Height Ground to DPC

Depth of skirt below DPC

Door aperture (If Applicable)

DURAWALL DETAILS

EXTERNAL WALL FINISH
- ☐ Plain
- ☐ Render Board
- ☐ Brick Slips
- ☐ 30 Minute Firewall

Brick Type:

INTERNAL WALL FINISH
- ☐ Plaster (not supplied)
- ☐ Brick

Brick Type:

MORTAR COLOUR
- ☐ Grey
- ☐ Sand
- ☐ Red

Note: Air bricks are 2 courses below on Durabase 50 bases (top course on Durabase Plus bases), unless otherwise stated.

DURABASE
BUILDING FOR THE FUTURE

DURABASE PLAN

Delivery 4-5 weeks from receipt of completed order. 50% deposit required to commence manufacture with the balance due at least 2 working days before delivery, as per our terms and conditions.

Delivery included to mainland England and Wales (contact office for delivery to other areas).

DURABASE
BUILDING FOR THE FUTURE

DURAWALL PLAN

Durabase a trading name of Wye Valley Engineering Ltd.
Durabase House, Netherwood Road, Rotherwas Ind. Estate Hereford, HR2 6JU
www.durabase.co.uk | 01432 266507 | sales@durabase.co.uk

JN: 6402 | 0726

NOTES

NOTES

DURABASE

BUILDING FOR THE FUTURE

Durabase a trading name of Wye Valley Engineering Ltd.
Durabase House, Netherwood Road, Rotherwas Ind. Estate
Hereford, HR2 6JU

JN: 9437 07/26 V2

www.durabase.co.uk | 01432 266507 |